SECTION 10
CAB

TABLE OF CONTENTS

PAGE

Servicing.....10- 2
Windshield and Back Light Glasses.....10- 3
Sliding Rear Window Assembly.....10- 8
Doors.....10- 12
Instrument Panel.....10- 26
Console Box.....10- 31
Head Lining.....10- 33
Quarter Glass (Space Cab).....10- 36
Front Seat.....10- 37
Front and Rear Seat Belt.....10- 39
Jump Seat.....10- 40
Jump Seat Belt.....10- 41

SERVICING

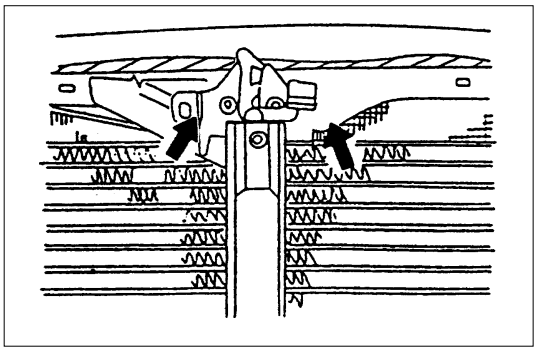

Engine Hood Lock

Align the engine hood lock with the installation holes.

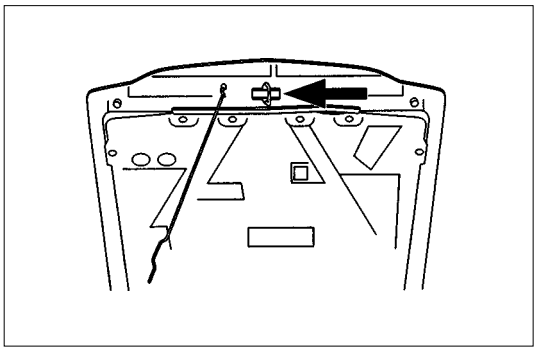

Engine Hood Striker

Apply a light coat of grease to the striker.

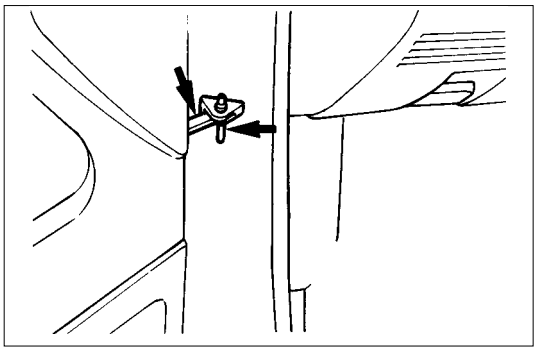

Door Checker Arm and Pin

Apply a light coat of grease to the checker arm and pin.

WINDSHIELD AND BACK LIGHT GLASSES

GENERAL DESCRIPTION

This vehicle uses two types of safety glass: (1) laminated safety plate, for the windshield, and (2) solid tempered safety plate, for the back glass.
The windshield glass is one-piece and is directly retained in the windshield opening by the adhesive.
When replacing a cracked windshield glass, it is very important that the cause of the glass breakage be determined and the condition corrected before a new glass is installed. Otherwise, it is possible that a small obstruction or high spot somewhere around the windshield opening will continue to crack or break the newly installed windshield. This is especially true when the strain on the glass caused by this obstruction is increased by such conditions as wind pressures, extremes of temperature, motion of the vehicle, etc. The procedure for removal of the windshield applies to the complete windshield assembly.

WINDSHIELD GLASS | **BACK LIGHT GLASS**

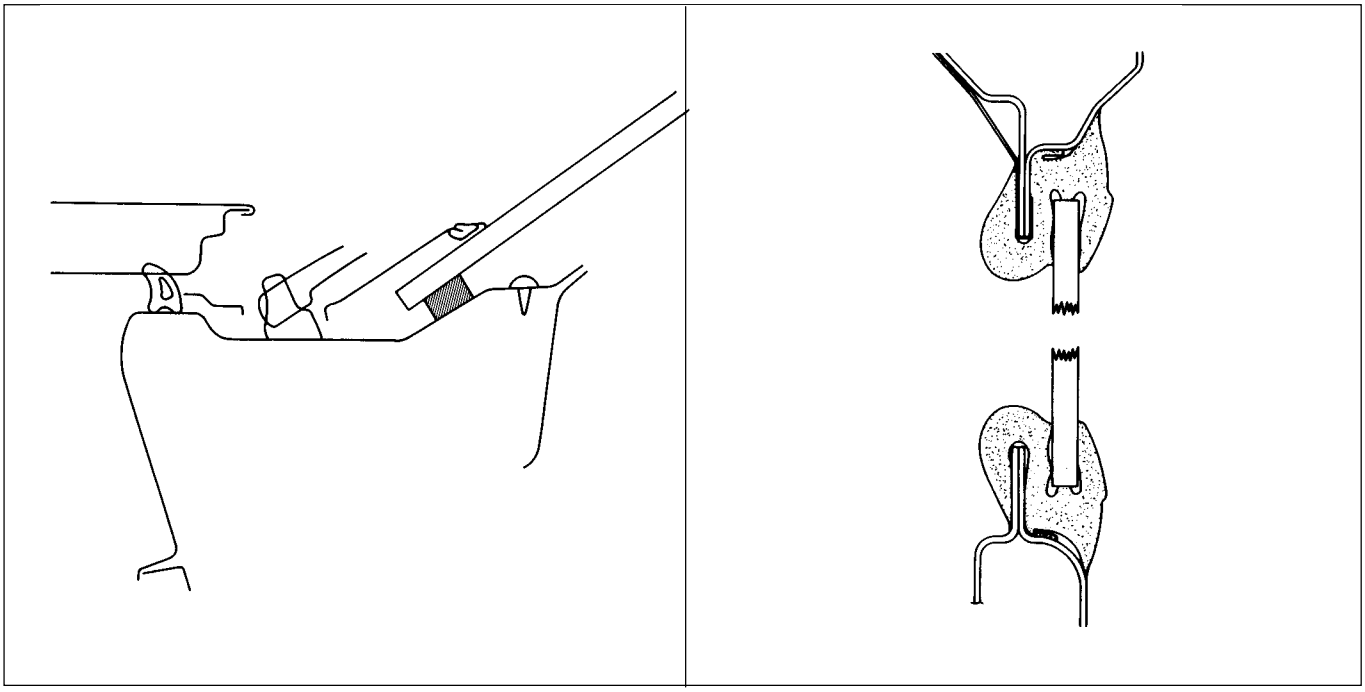

REMOVAL AND INSTALLATION

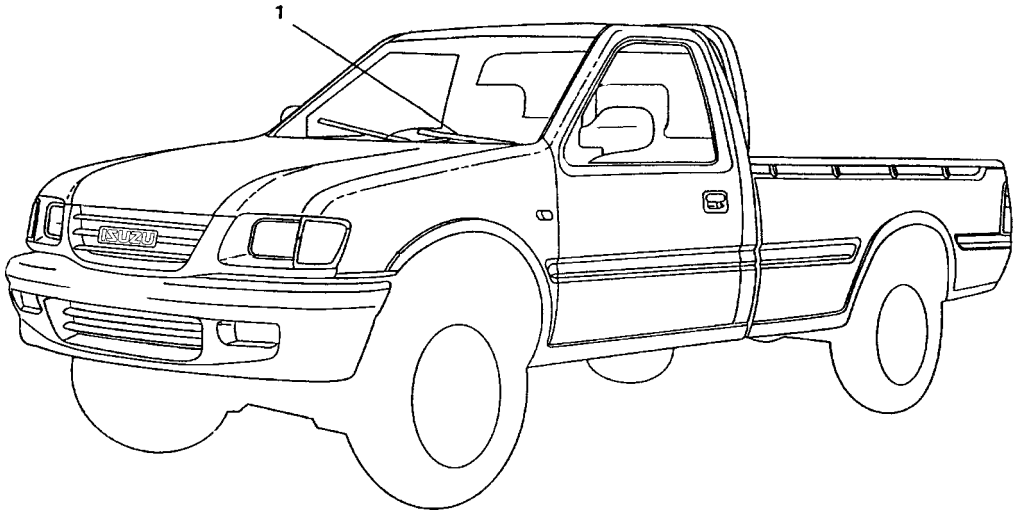

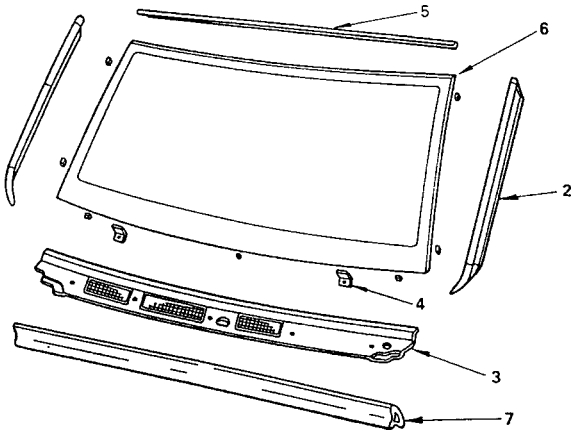

For RHD model

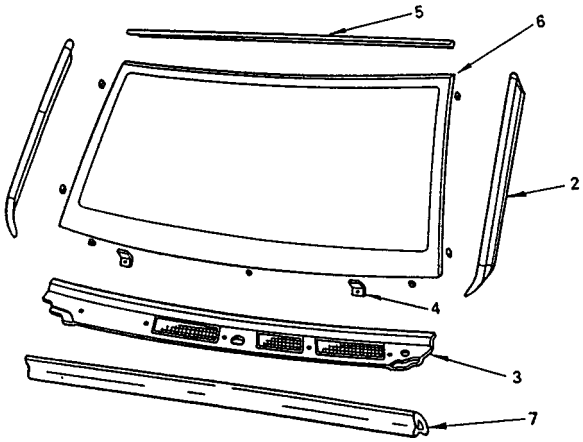

For LHD model

Removal Steps

1. Wiper arm assembly
2. Side moulding
3. Vent cowl cover
4. Windshield stopper
5. Upper moulding
▲ 6. Windshield glass
7. Engine hood rear seal

Installation Steps

▲ 7. Engine hood rear seal
▲ 6. Windshield glass
▲ 5. Upper moulding
▲ 4. Windshield stopper
3. Vent cowl cover
▲ 2. Side moulding
1. Wiper arm assembly

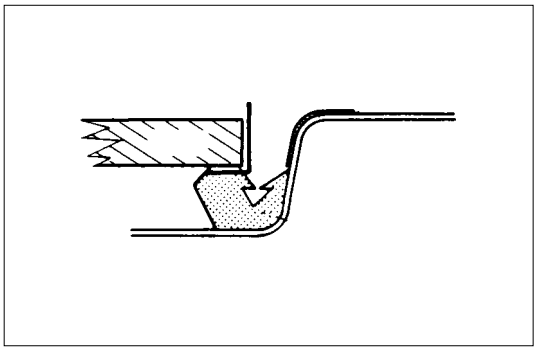

Important Operation - Removal

6. Windshield Glass

Remove the windshield glass, carefully following the steps listed below :

1) Use a knife to cut through part of the adhesive caulking material.
2) Secure one end of a piece of steel piano wire (0.02 inches in diameter) to a piece of wood that can serve as a handle.
3) Use a pair of needle nose pliers to insert the other end of the piano wire through the adhesive caulking material at the edge of the windshield glass.
4) Secure the other end of the piano wire to another piece of wood.

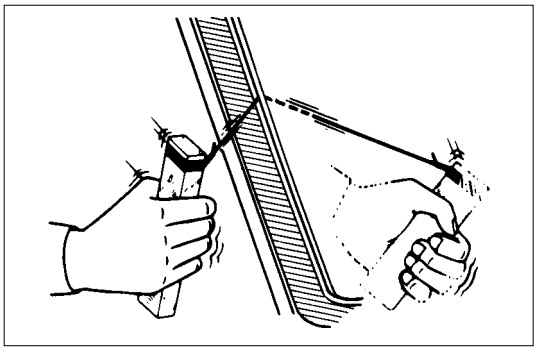

5) With the aid of an assistant, carefully move the piano wire with a sawing motion to cut through the adhesive caulking material around the entire circumferance of the windshield glass.
6) Lift the windshield from the body.
7) Clean any remaining adhesive caulking material from the area of the body which holds the windshield.
8) Use a soft rag and unleaded gasoline to wipe off any adhesive remaining on the windshield glass.

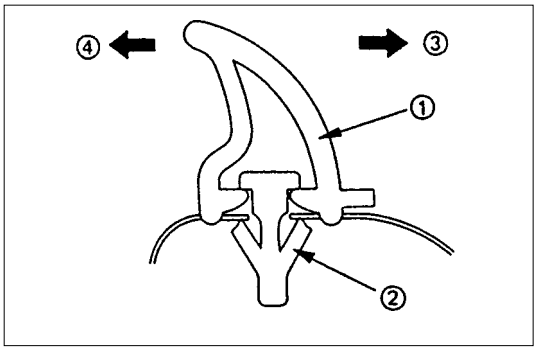

Important Operations - Installation

7. Engine Hood Rear Seal

Install the engine hood rear seal as shown in the illustration.

① : Seal
② : Clip
③ : Rear (windshield glass side)
④ : Front

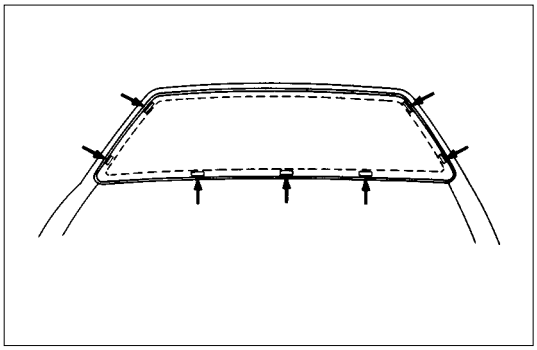

6. Windshield Glass

1) Clean the windshield glass bonding surface.
2) Use a soft rag and unleaded gasoline to wipe off any adhesive remaining on the body.
3) Mount the body window glass as shown in the illustration. Attach spacers at seven (7) locations.

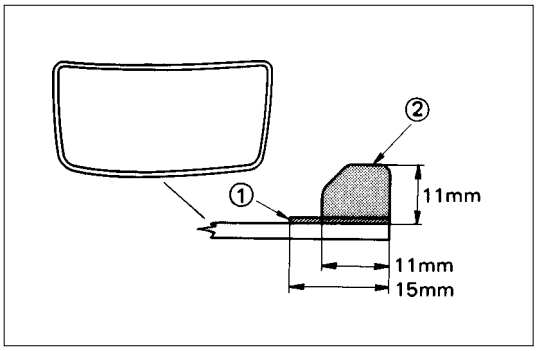

4) Apply primer ① #435-95 or equivalent to the body side bonding surface. The primer should extend 25 mm (1 in.).
Apply primer #435-40 or equivalent to the windshield glass side bonding surface.
The primer should extend 15 mm (0.6 in.) from end of the glass.

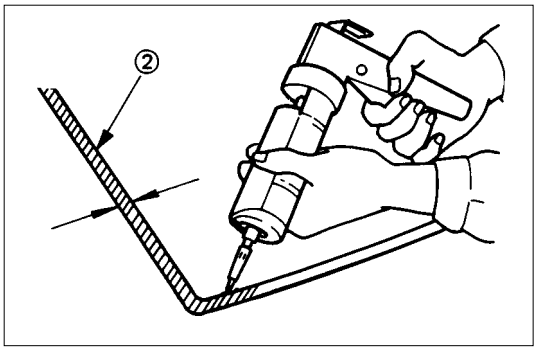

Apply the window glass sealing adhesive ②.
If you are using an air gun, air pressure should be maintained at 147 - 294 kpa.

Note :
Open time (1 min. or more) should be set after application of the primer.
Bonding shall be done within 5 minutes after the sealer has been applied.

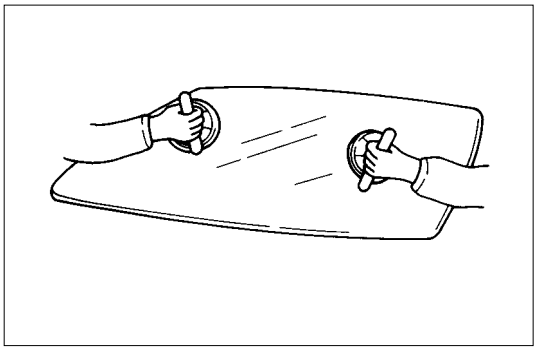

Adjust the setting of the windshield glass with suction discs.

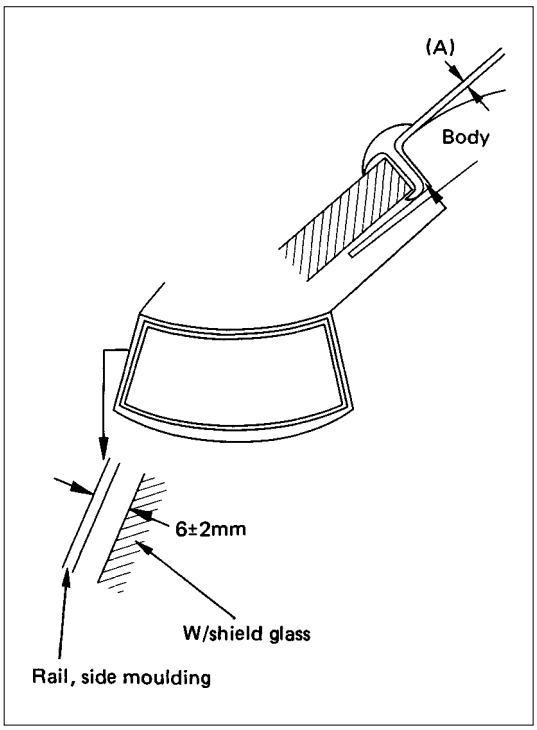

The center of the windshield glass should be in alignment with the center of the windshield glass opening.
The clearance between body and upper moulding should be within 0.5 mm (A).
Both of the clearance for RH and LH should be same. (6 mm ± 2 mm)

Note:
It is a good idea to perform the windshield installation procedure from beginning to end without pausing. If you allow time to elapse between steps, excessive amounts of adhesive may be extruded from around the windshield.

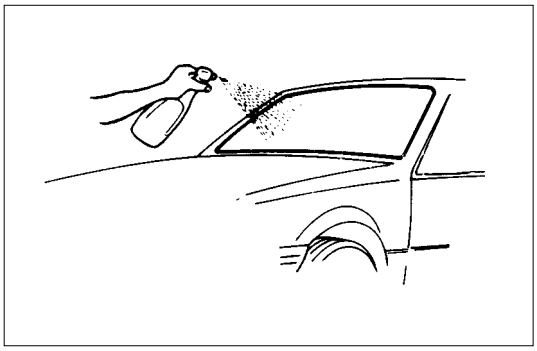

5. Upper Moulding

1) Before installing the windshield moulding (at the upper part of the windshield), spray hot water at a temperature of about 140°F (60°C) onto the windshield glass and the adhesive. This will cause curing.

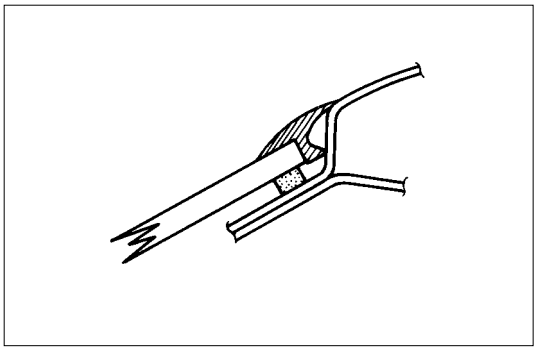

2) Install the upper moulding as soon as hot water has been applied. Using a roller push moulding in until it bottoms.

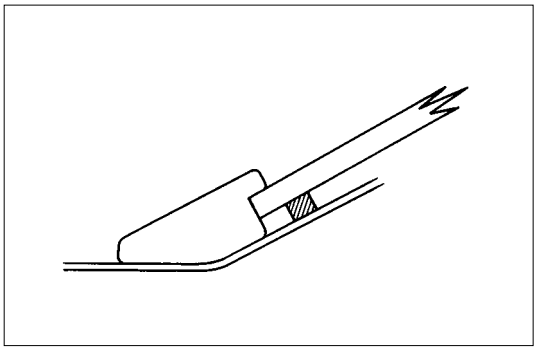

4. Windshield Stopper

Do this immediately after completing the gap adjustment.

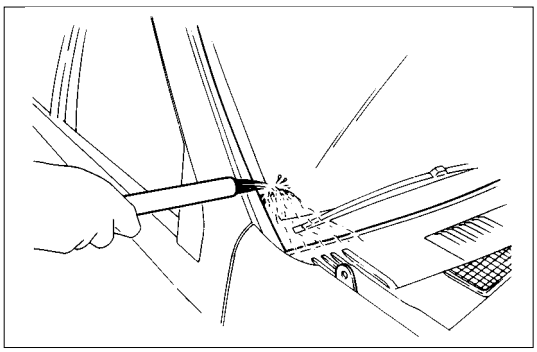

2. Side Moulding

Use unleaded gasoline and a soft cloth to wipe away any excess adhesive.
Cure the bonding at a temperature of 68° - 86°F (20° - 30°C) for twenty-four hours.
Check that the windshield does not leak water.

SLIDING REAR WINDOW ASSEMBLY

DISASSEMBLY

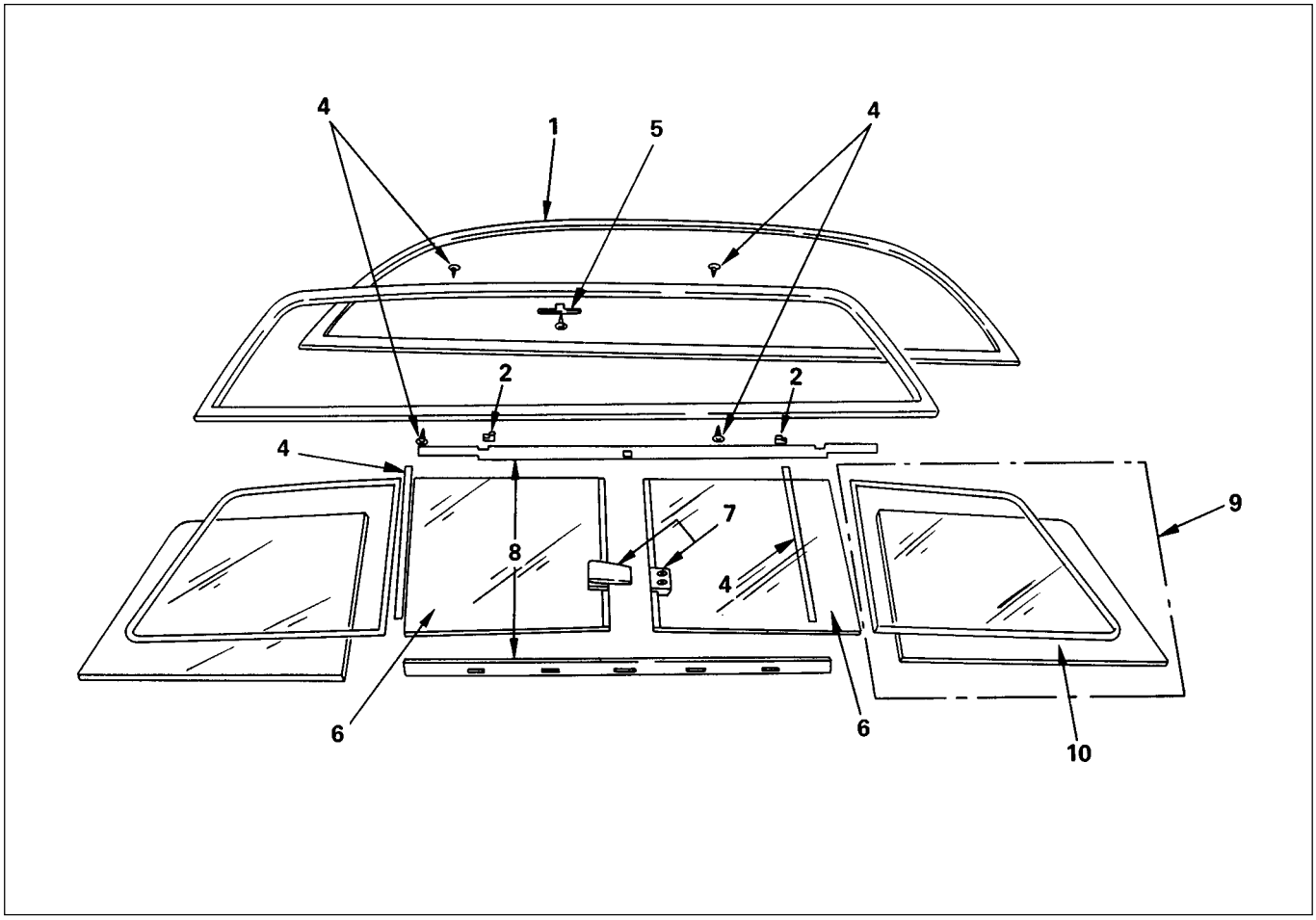

Disassembly Steps

- ▲ 1. Weather strip
- ▲ 2. Packing ; rear window
- 3. Screw; binding
- ▲ 4. Frame ; rear window
- 5. Stopper
- ▲ 6. Rear window ; slide
- 7. Lock assembly with catchback window
- 8. Glass run
- ▲ 9. Glass ; rear window corner
- 10. Weather strip ; rear window corner

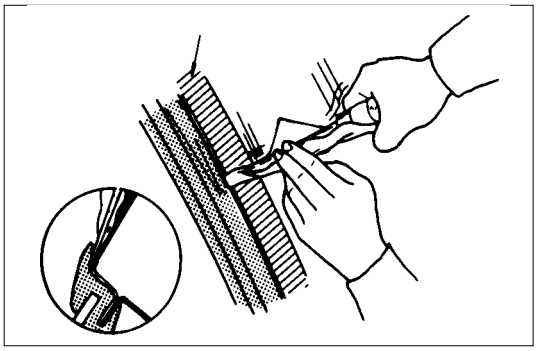

Important Operation - Removal

1. Weather Strip
Remove the weather strip with a knife.

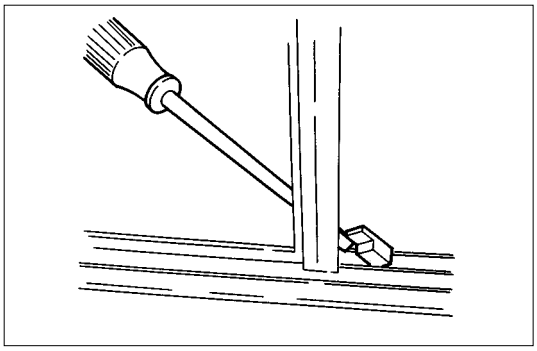

2. Packing ; Rear Window
With a screwdriver or similar tool, remove the window stop.

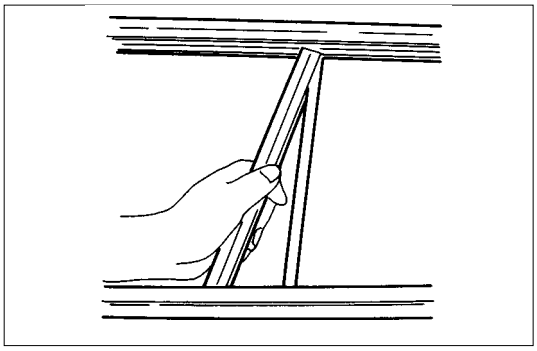

4. Frame ; Rear Window
Place the window channel in a vertical position and remove the frame rear by pulling on one end of it with your hand.

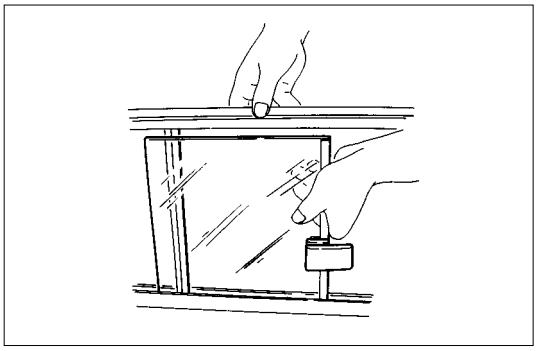

6. Rear Window ; Slide
With the window channel held in a vertical position, remove the rear window ; slide.

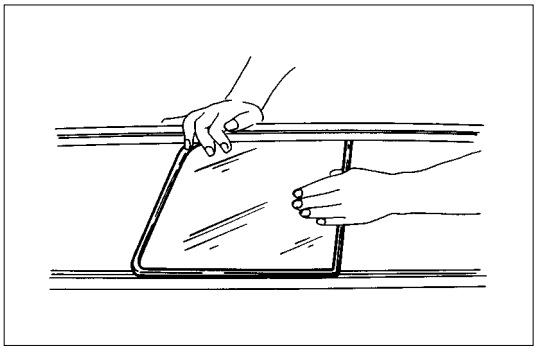

9. Glass ; Rear Window Corner
Stand the window channel up and remove the glass ; rear window corner.

REASSEMBLY

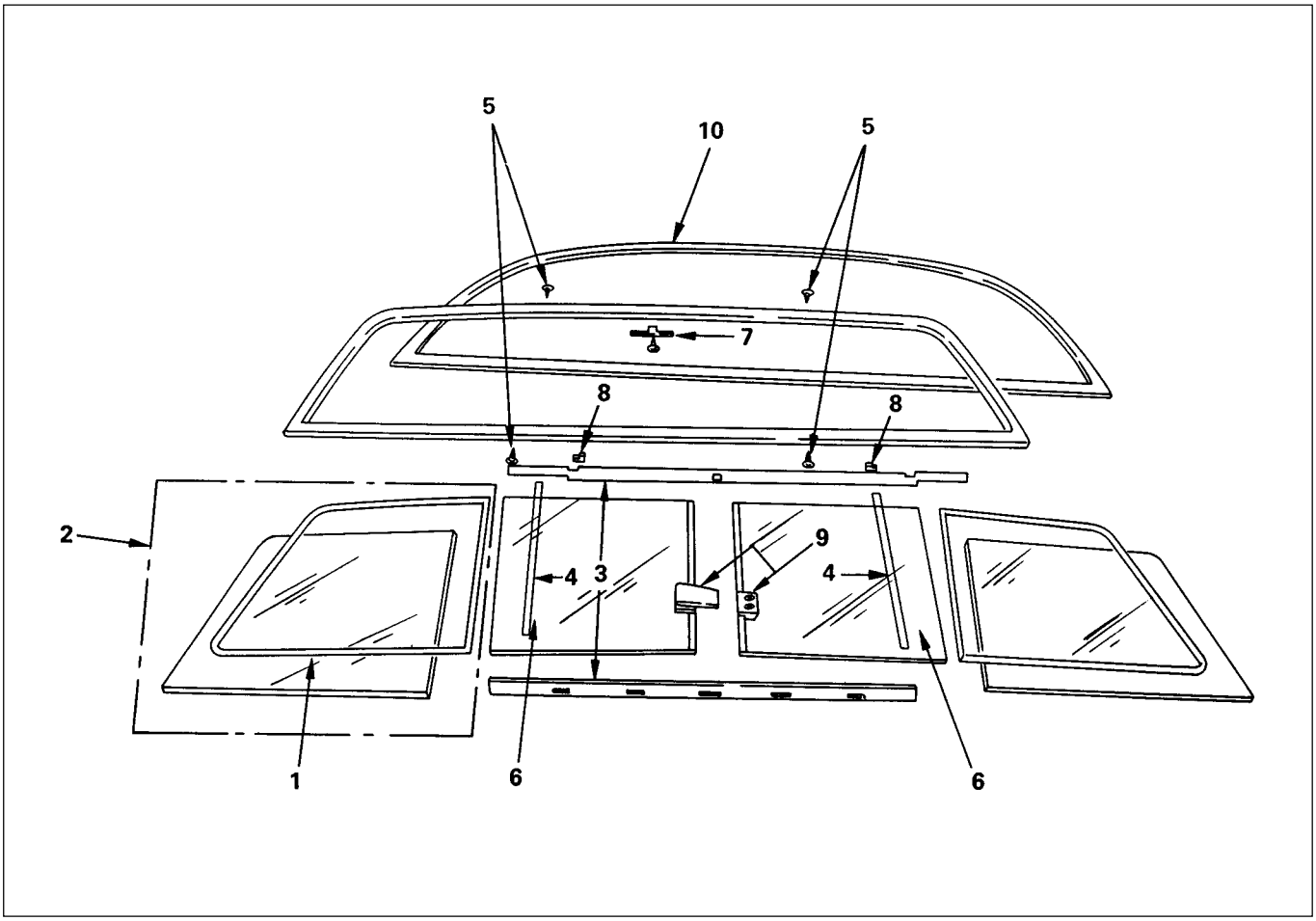

Riassembly Steps

▲ 1. Weather strip ; rear window corner
▲ 2. Glass ; rear window corner
▲ 3. Glass run
4. Frame ; rear window
5. Screw; binding
▲ 6. Rear window ; slide
7. Stopper
▲ 8. Packing ; rear window
9. Lock assembly with catchback window
10. Weather strip

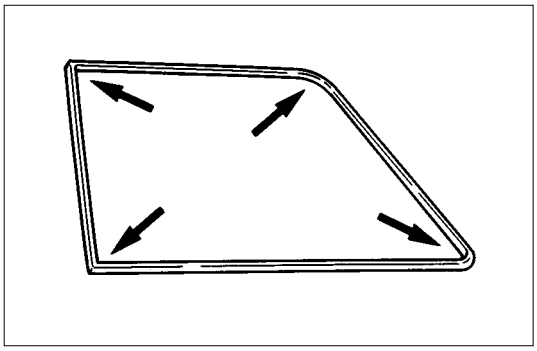

Important Operation - Installation

1. Weather Strip ; Rear Window Corner
Using Semedain #560 (or equivalent) adhesive, glue the weather strip to the complete circumference of the frame, paying close attention to the corner areas.

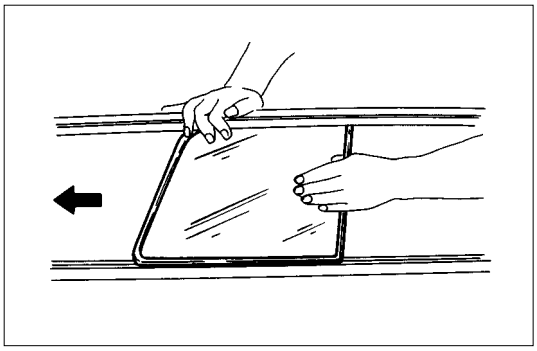

2. Glass ; Rear Window Corner
Apply soap and water to the rim as a lubricant.
Place the channel in a vertical position. With your hand, apply pressure to expand the channel. Insert the window glass in the center of the channel.

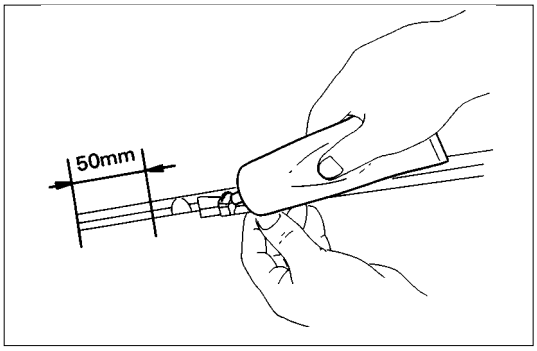

3. Glass Run
Apply Semedain #560 (or equivalent) adhesive to the entire length of both the upper window glass and the weather strip. Apply adhesive to both sides of the extreme ends of the lower portion for a distance of about 50 mm.
There should be no gap between the weather strip rear window glass channel and the channel.

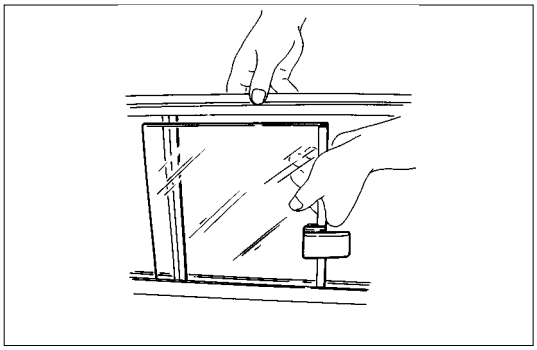

6. Rear Window ; Slide
Hold the window vertically. Apply an upward pressure to the channel and insert the rear window slide.

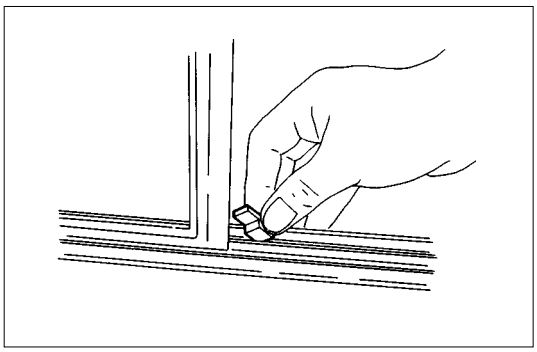

8. Packing ; Rear Window
Apply a fast setting adhesive agent to both sides of the window atop and insert it into the channel.

DOORS

GENERAL DESCRIPTION

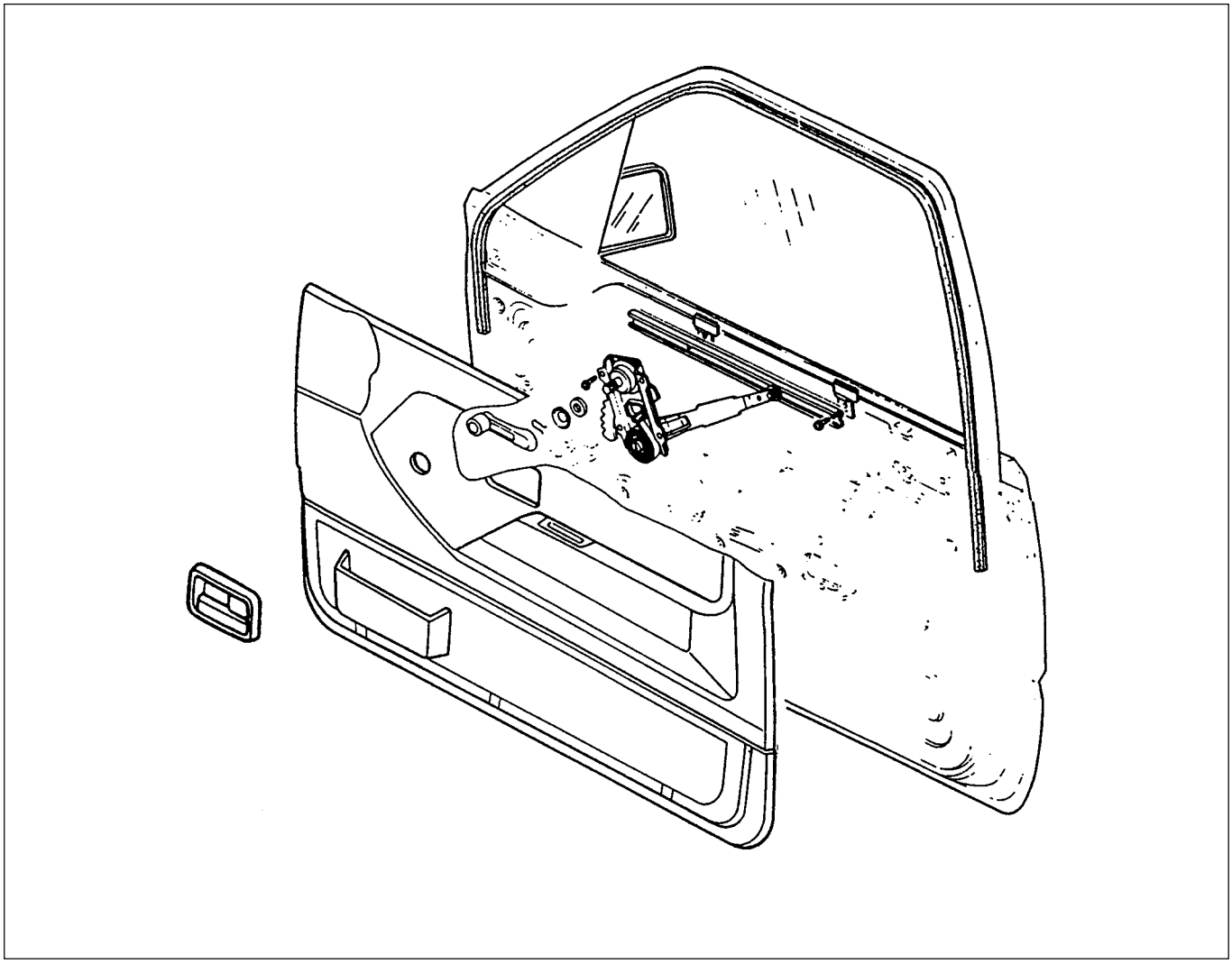

REMOVAL AND INSTALLATION

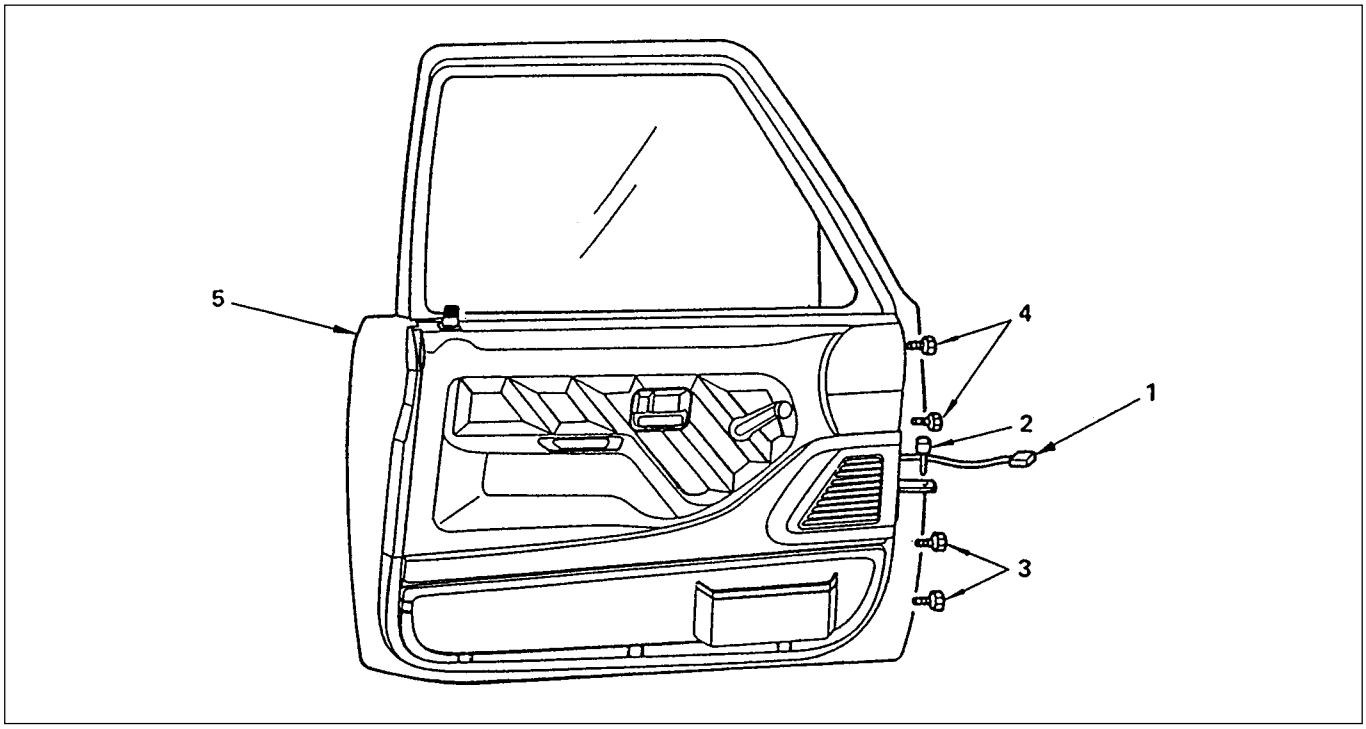

Removal Steps

1. Door harness
2. Checker pin
3. Lower hinge
4. Upper hinge
5. Door assembly

Installation Steps

5. Door assembly
4. Upper hinge
3. Lower hinge
2. Checker pin
1. Door harness

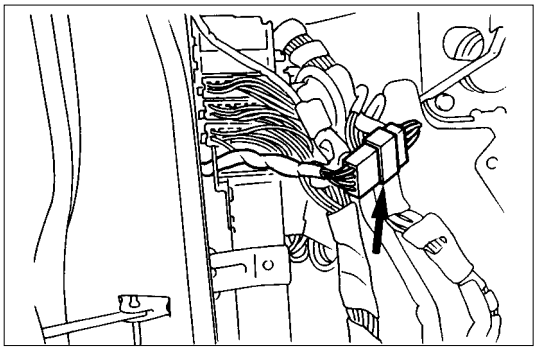

Important Operation - Removal

1. Door Harness

Disconnect the door harness.

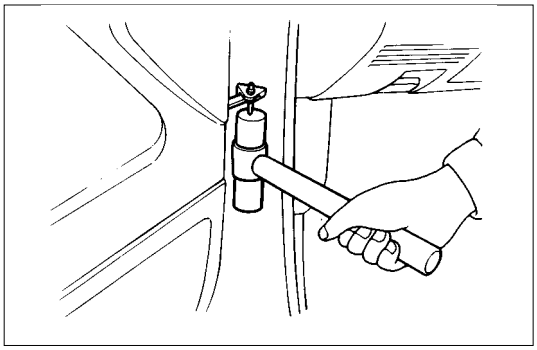

2. Checker Pin

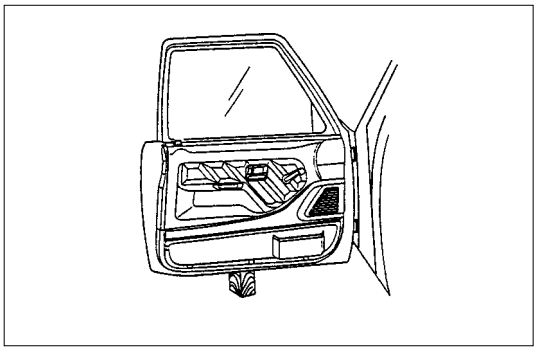

3. Lower Hinge

Position a wood block under the door for protection and support the door assembly with hands at removal or installation.

DISASSEMBLY

(Front Door)

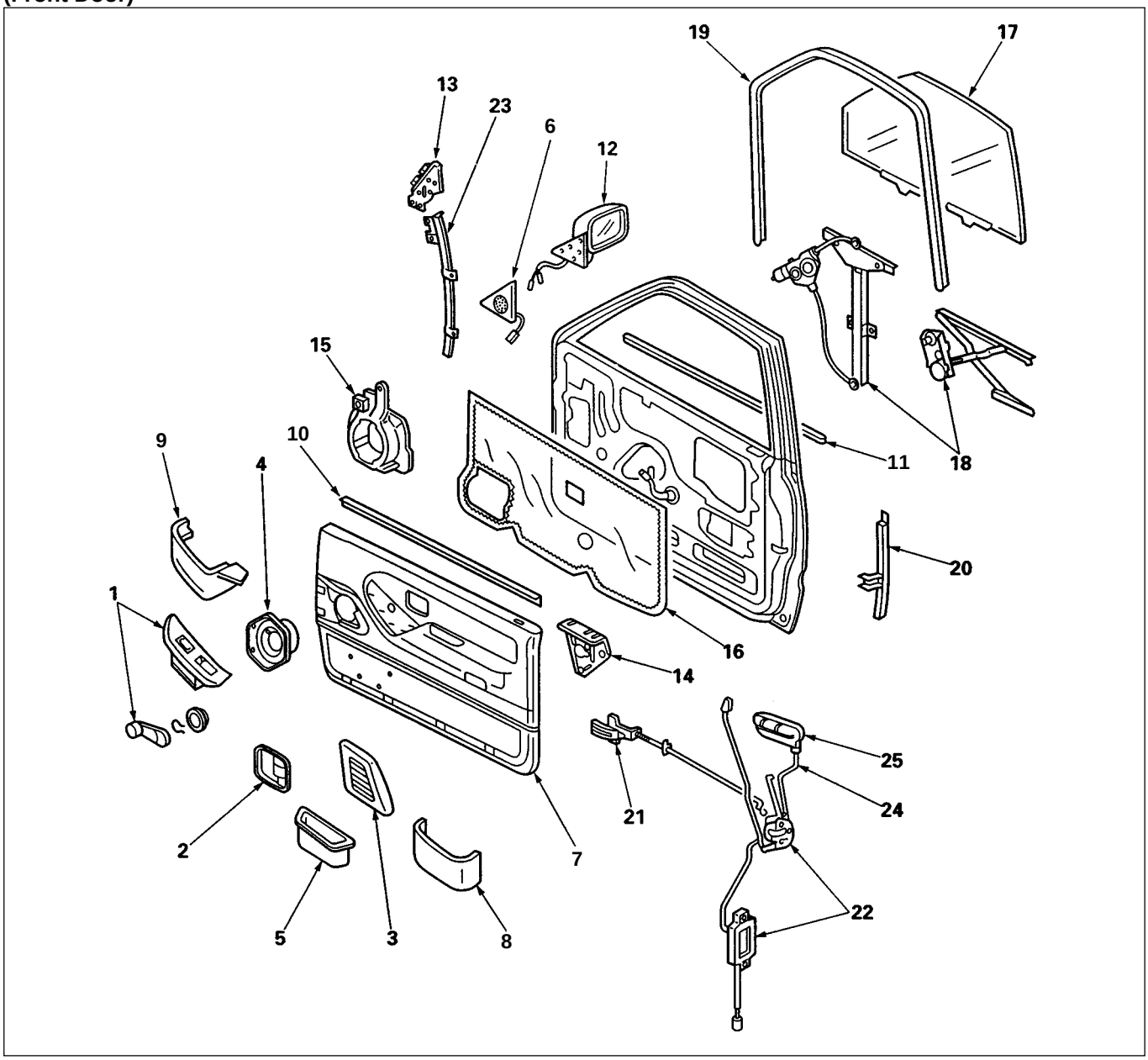

Disassembly Steps

- ▲ 1. Power window switch/Windows regulator handle
- ▲ 2. Bezel
- ▲ 3. Speaker grill
- ▲ 4. Speaker assembly
- ▲ 5. Door pull case
- ▲ 6. Door mirror cover/Tweeter
- ▲ 7. Door trim pad
- ▲ 8. Door pocket
- ▲ 9. Power window box
- ▲10. Inner waste seal
- ▲11. Outer waste seal
- ▲12. Door mirror assembly
- ▲13. Door mirror bracket
- ▲14. Bracket
- ▲15. Speaker box
- ▲16. Water-proof sheet
- ▲17. Window glass
- ▲18. Window regulator/Power window motor
- ▲19. Glass run
- ▲20. Glass run rear channel
- ▲21. Inside lever
- ▲22. Door lock assembly/Door lock actuator
- ▲23. Glass run front channel
- ▲24. Door lock cylinder
- ▲25. Outside handle

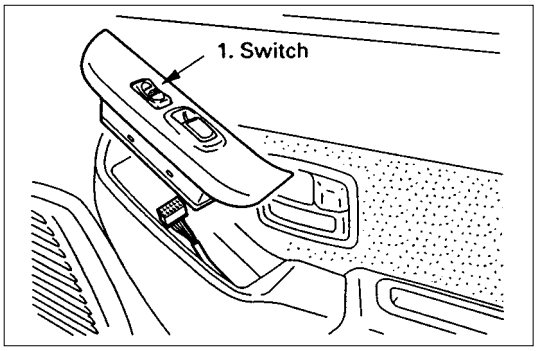

Important Operations

1. Power Window Switch/Window Regulator Handle

- Prise out the power window switch and remove the connectors.

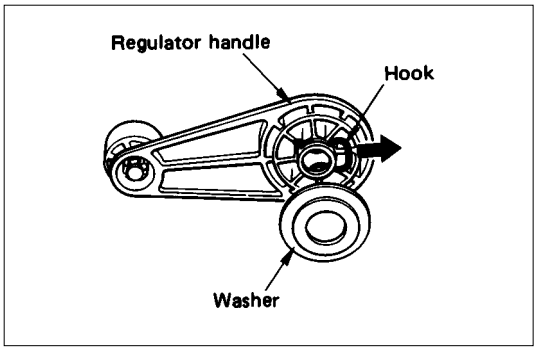

- To remove the regulator handle, remove the clip at the root of the handle by using wire.

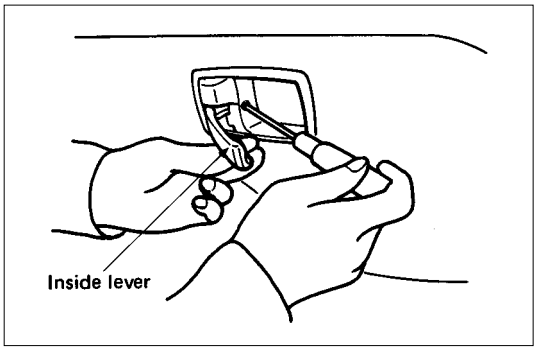

2. Bezel

- Remove the screw while pulling the inside lever toward you.

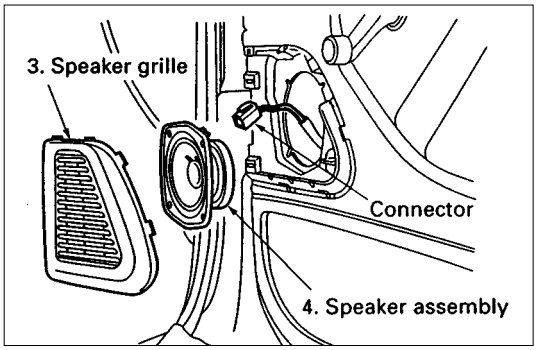

3. Speaker Grill

- Pull out the clips.

4. Speaker Assembly

- Remove 4 screws and disconnect the speaker harness connector.

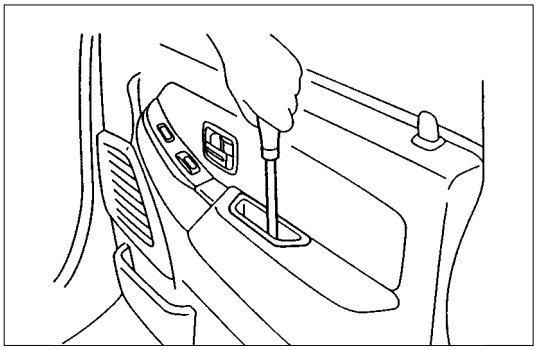

5. Door Pull Case

- Remove the screw at the bottom of the case.

6. Door Mirror Cover/Tweeter

- Pull out the upper clip, and then take out the catch at the lower section.
- If so equipped the tweeter, disconnect the speaker harness connector.

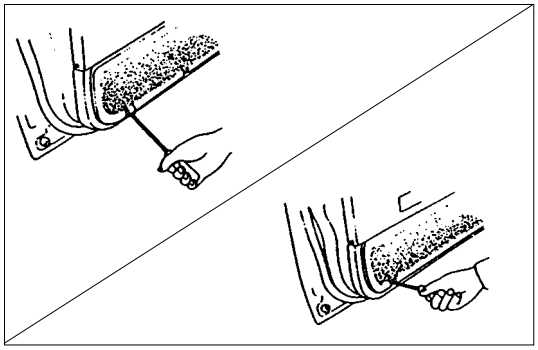

7. Door Trim Pad

- Remove the cover bottom of the trim pad (4 pcs), then remove the screws.

8. Door Pocket

9. Power Window Box

10. Inner Waste Seal

11. Outer Waste Seal

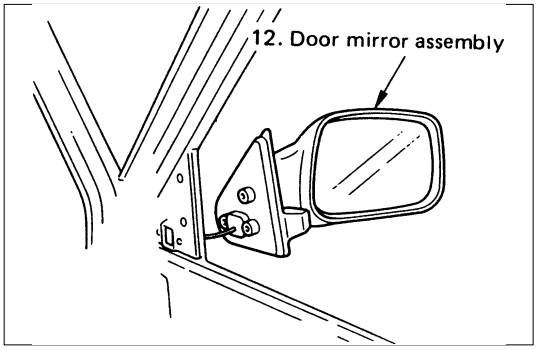

12. Door Mirror Assembly

- Remove 3 fixing bolts and then remove the connector.

13. Door Mirror Bracket

- Remove 2 bolts at the lower section, and then remove 2 screws in the weather strip.

14. Bracket

15. Speaker Box

- Remove 3 fixing bolts.

16. Water Proof Sheet

- Take care not to damage the sheet when peeling it off.

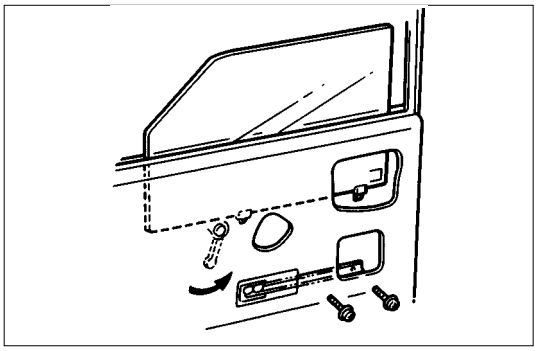

17.Window Glass

- Remove 2 screws through the access hole and pull out the window glass upward.

18.Window Regulator/Power Window Motor

- Disconnect the power window motor connector.

19.Glass Run

- Pull it out of the door piller of the channel. (front/rear)

20.Glass Run Rear Channel

- Remove 2 screws.

21.Inside Lever

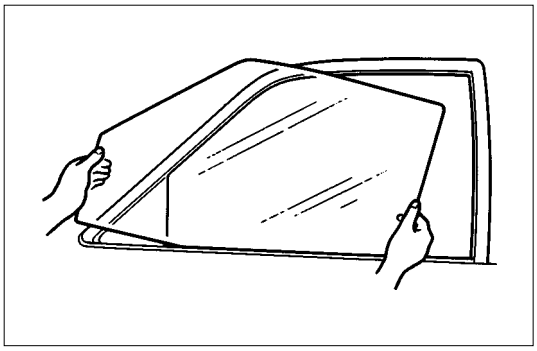

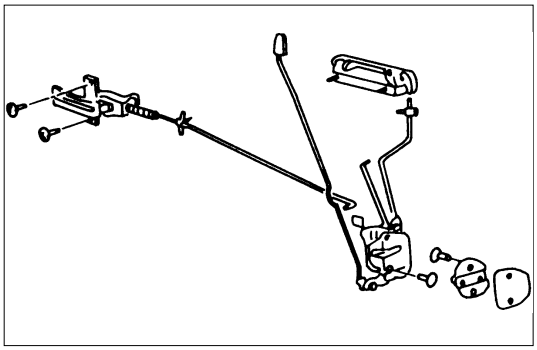

22.Door Lock Assembly/Door Lock Actuator

- Disconnect the linkage with the outside handle, the inside lever and the lock cylinder.

23.Glass Run Front Channel

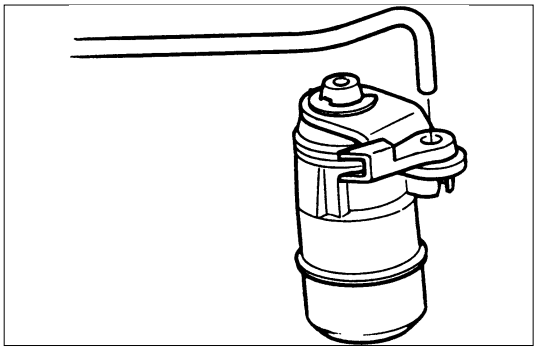

24.Door Lock Cylinder

- Remove the door lock cylinder by applying finger pressure from inside while depressing the retaining clip.

25.Outside Handle

DISASSEMBLY AND REASSEMBLY

(Rear Door)

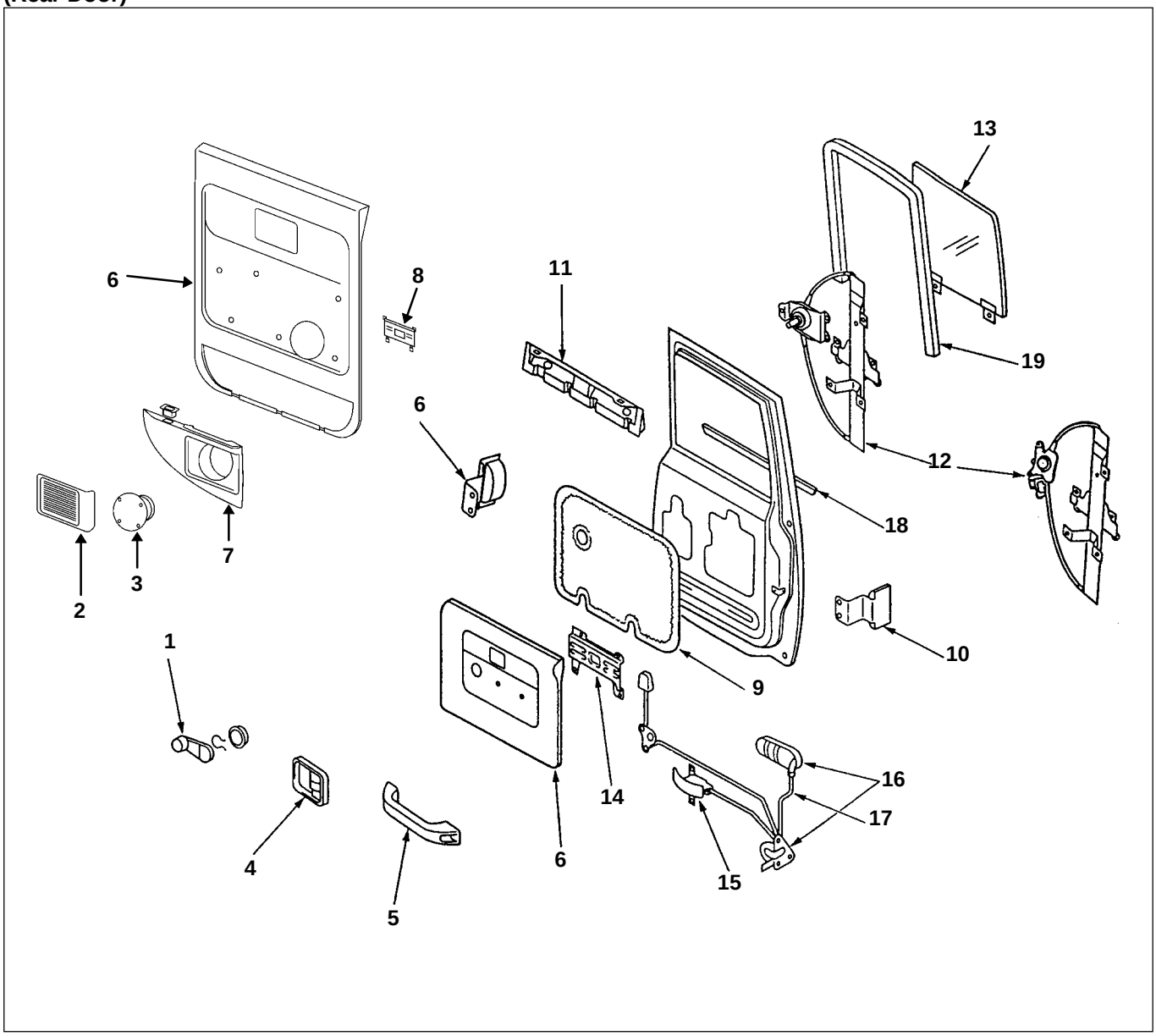

Disassembly Steps

▲ 1.Power window switch/Window regurator handle
2. Speaker grill
3. Speaker
▲ 4. Bezel
5. Inside pull handole
▲ 6. Door trim pad
7. Arm rest sm
8. Bracket
9. Water proof sheet
10. Glass guide
11. Upper cover
▲12. Window regurator/Power window motor
▲13. Window glass
14. Bracket
15. Inside lever
16. Outside handle
▲17. Door lock cylinder
18. Outer waste seal
19. Glass run

Reassembly Steps

To reassemble, follow the disassembly steps in the reverse order.

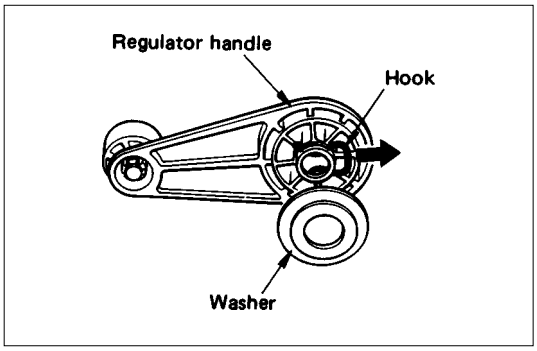

Important Operations

1. Window Regulator Handle

- To remove the regulator handle, remove the clip at the root of the handle by using wire.

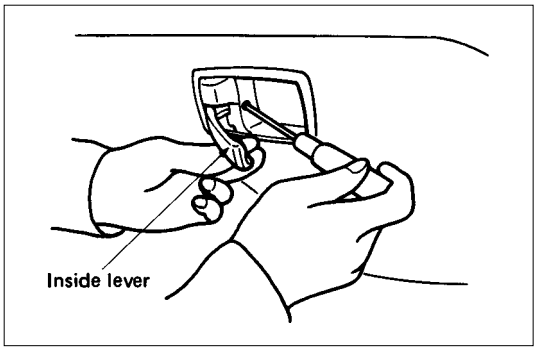

4. Bezel

- Remove the screw while pulling the inside lever toward you.

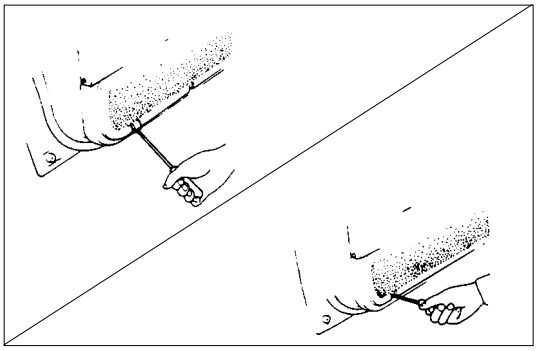

6. Door Trim Pad

- Remove the cover bottom of the trim pad (4 pcs), then remove the screws.

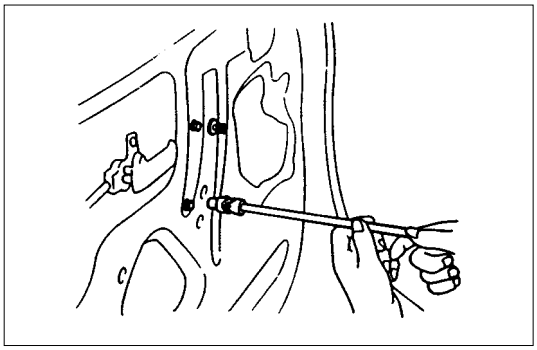

12.Window Regulator

- Remove the 4 screws holding the regulator.

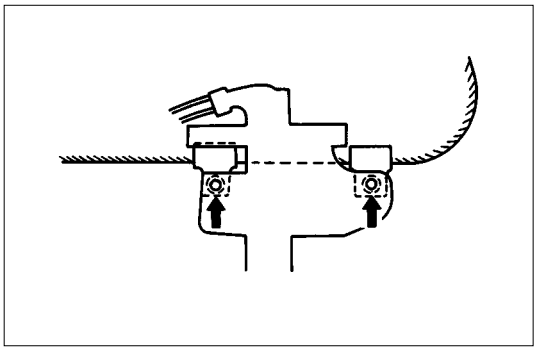

13.Window Glass

- First, align the height of regulator to the access hole. Remove 2 screws attaching bottom channel and regulator, then remove the glass.

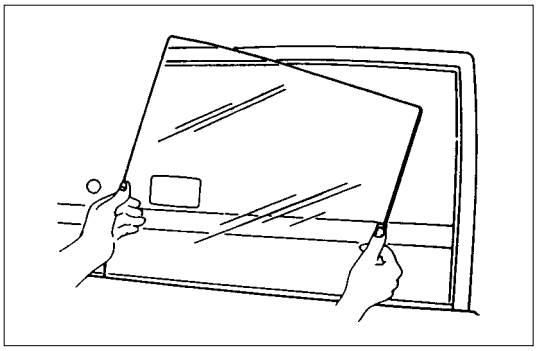

- Remove the window glass by tilting it as necessary.

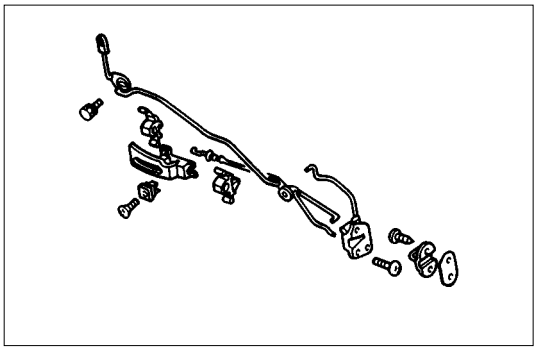

17.Door Lock Assembly

- Disconnect the linkage from the door outside handle, inside lever and lock cylinder.
  Remove the 2 bolts holding the outside handle from inner side.

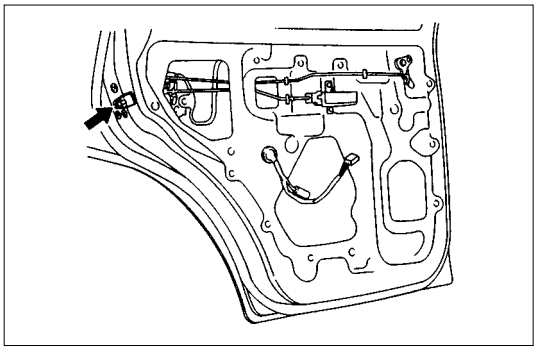

- Remove the 3 bolts holding the door lock assembly.

ADJUSTMENT (FRONT AND REAR)

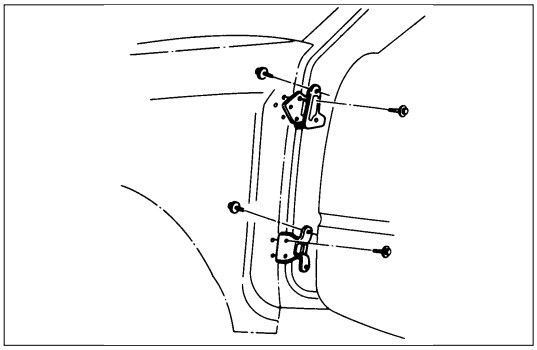

Door Hinge

Door alignment can be obtained by moving door hinges.
Prior to adjustment, remove the fender and set the door temporarily.
Loosen hinge to door bolts when adjusting steps between the door and body.
Loosen hinge to body bolts to adjust the clearance between the door and body.

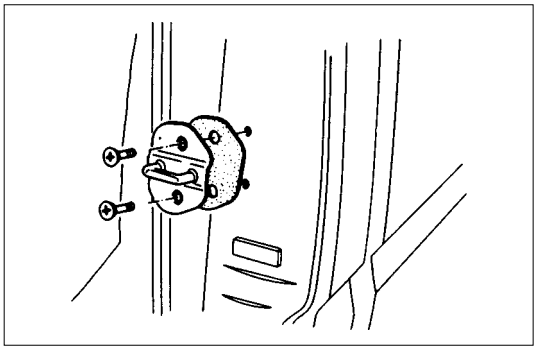

Door Striker

Loosen the striker screws and adjust the position of the striker by holding a piece of wood against the striker and tapping it with a hammer.
To obtain correct adjustment, move the position of the striker vertically so that the lower face of the dovetail becomes parallel to the striker.
Adjust the number of sheets to control engagement of the striker with the door latch. One or two sheets are generally used to obtain correct adjustment.

REASSEMBLY

(Front Door)

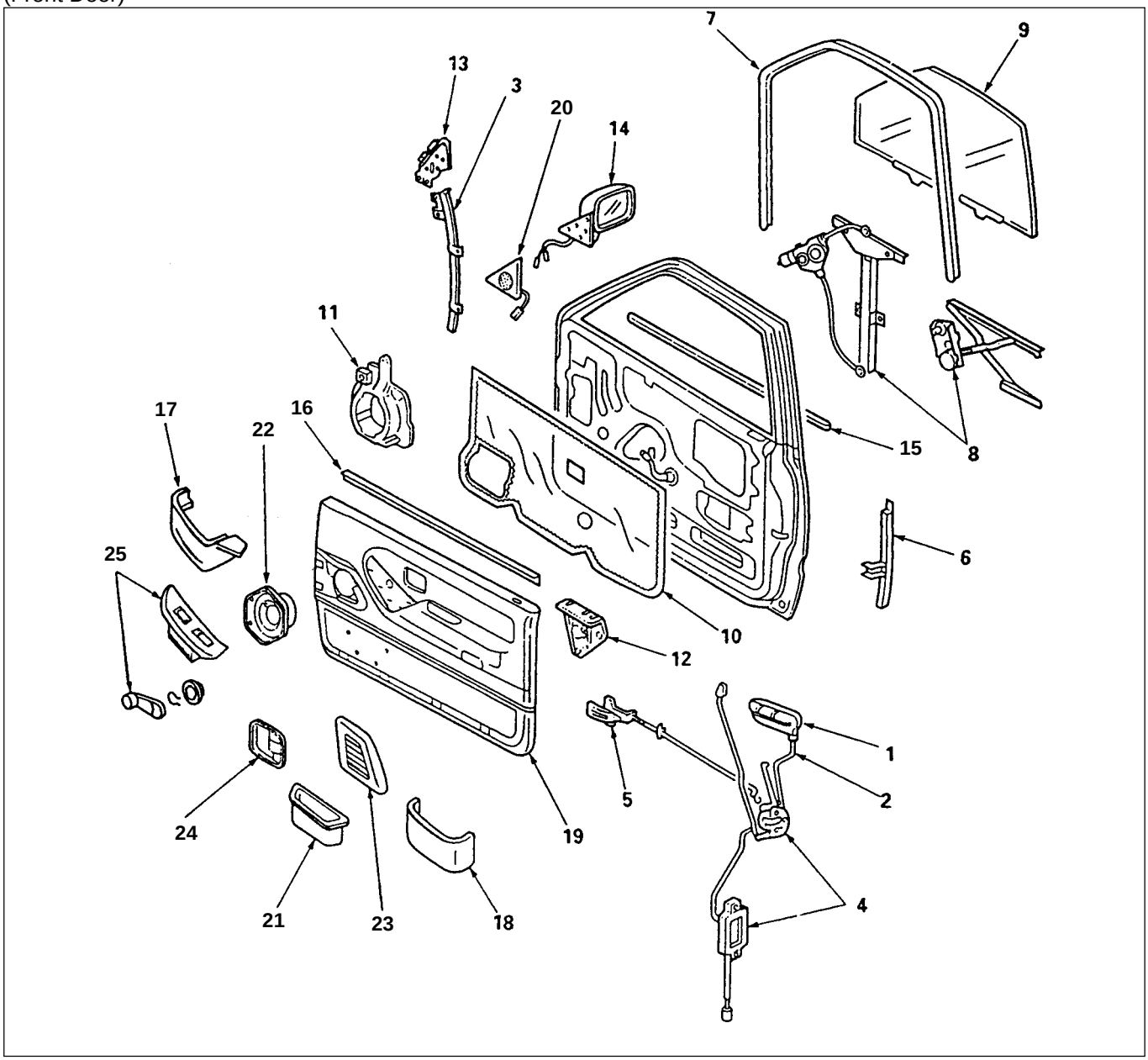

Reassembly Steps

1. Outside handle
2. Door lock cylinder
3. Glass run front channel
4. Door lock assembly/Door lock actuator
5. Inside lever
6. Glass run rear channel
7. Glass run
8. Window regulator/Power window motor
▲ 9. Window glass
▲10. Water proof sheet
11. Speaker box
12. Bracket
13. Door mirror bracket
14. Door mirror assembly
15. Outer waste seal
16. Inner waste seal
17. Power window box
18. Door pocket
19. Door trim pad
20. Door mirror cover/Tweeter
21. Door pull case
22. Speaker assembly
23. Speaker grill
24. Bezel
▲25. Power window switch/Windows regulator handle

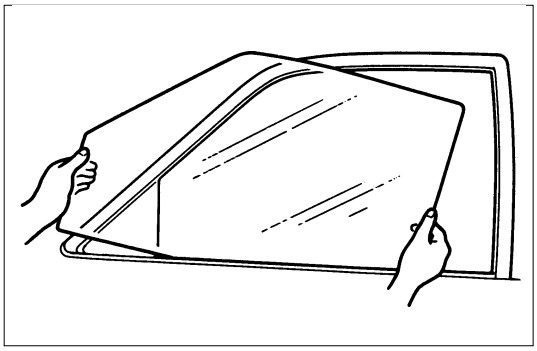

Important Operations

9.Window Glass

- Insert the window glass into position by tilting it as necessary, then set it against the channel of the window regulator.

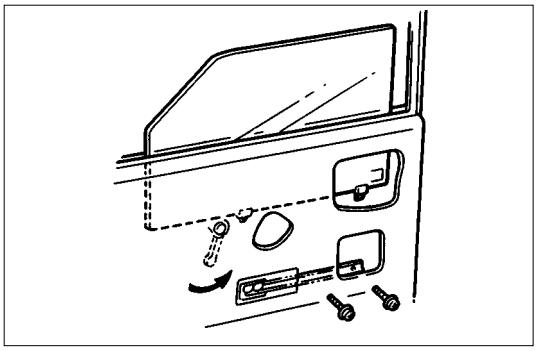

- Attach the window glass to the window regulator with the two screws.

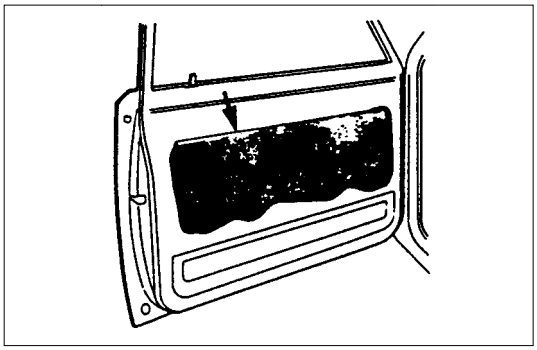

10.Water Proof Sheet

- Place the butyl type on the door panel so as not to cover the drain hole.

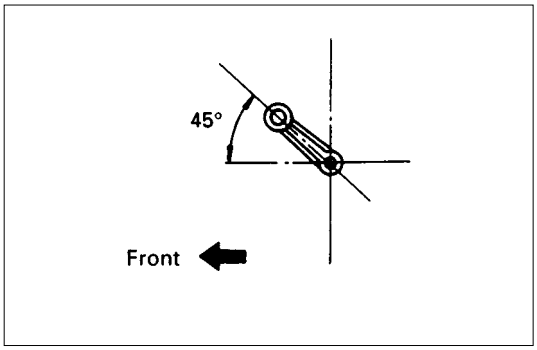

25.Regulator Handle

- Install the regulator handle as illustrated when closing the window glass.

ADJUSTMENT (FRONT AND REAR)

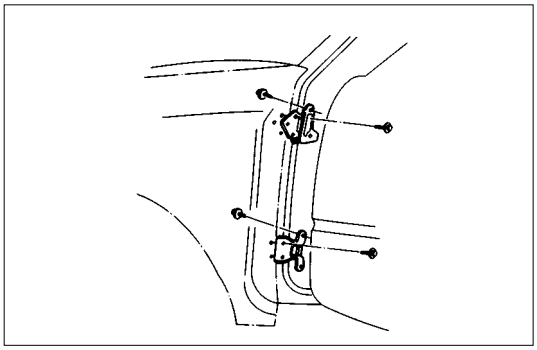

Door Hinge

Door alignment can be obtained by moving door hinges.
Prior to adjustment, remove the fender and set the door temporarily.
Loosen hinge to door bolts when adjusting steps between the door and body.
Loosen hinge to body bolts to adjust the clearance between the door and body.

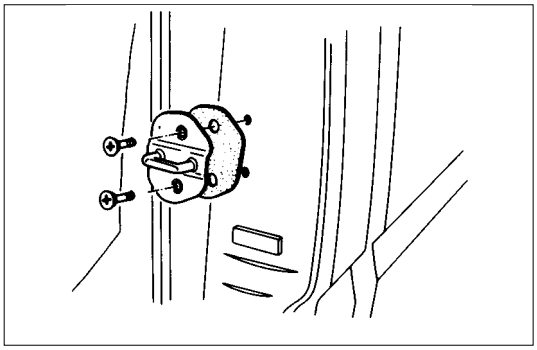

Door Striker

Loosen the striker screws and adjust the position of the striker by holding a piece of wood against the striker and tapping it with a hammer.
To obtain correct adjustment, move the position of the striker vertically so that the lower face of the dovetail becomes parallel to the striker.
Adjust the number of sheets to control engagement of the striker with the door latch. One or two sheets are generally used to obtain correct adjustment.

INSTRUMENT PANEL

REMOVAL

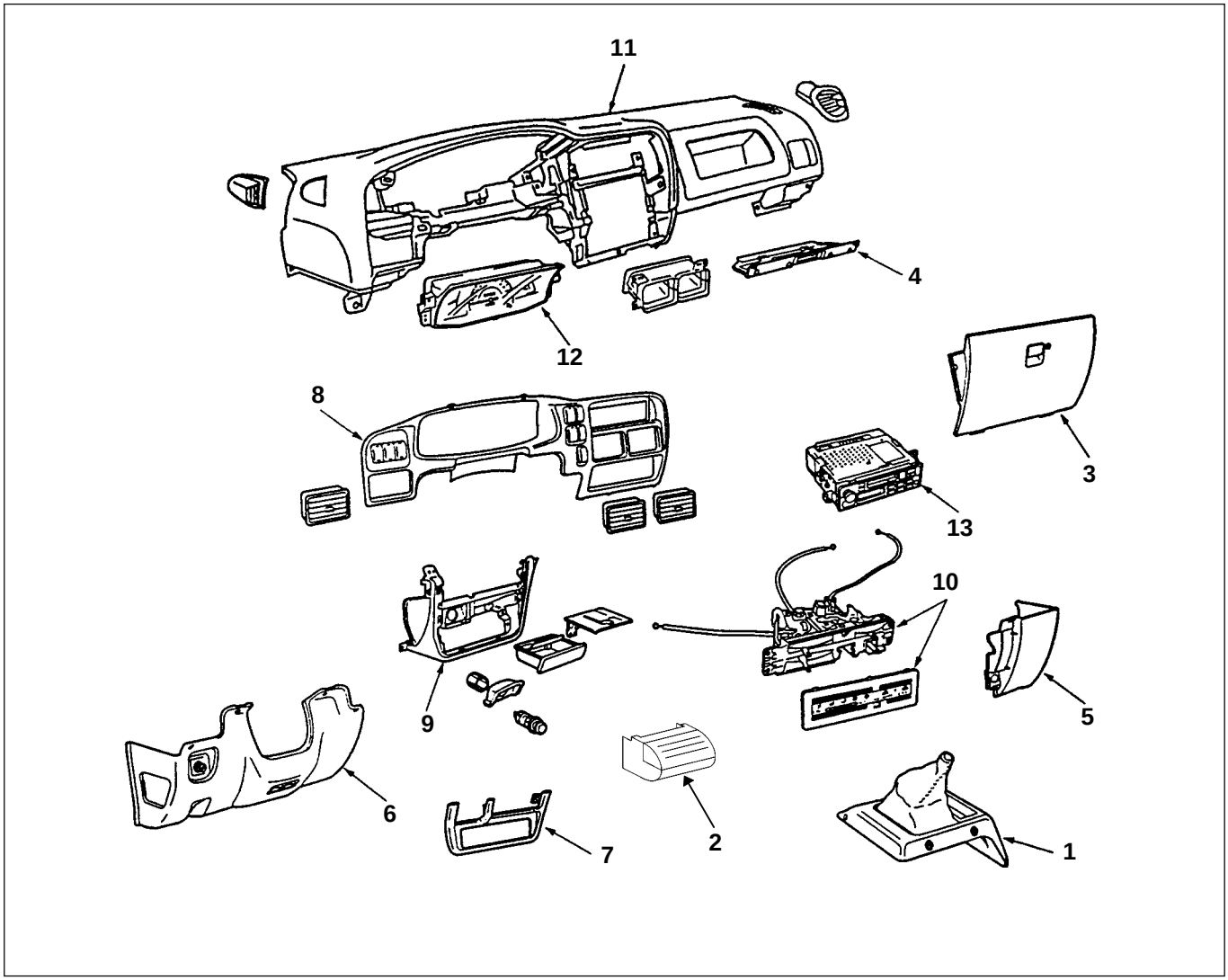

Disassembly Steps

- ▲ 1. Center console assembly
- ▲ 2. ECM cover (M/T Remote only)
- ▲ 3. Glove box
- ▲ 4. Glove box cover
- ▲ 5. Instrument panel passenger lower cover assembly
- ▲ 6. Instrument panel driver lower cover assembly
- ▲ 7. Lower cluster assembly
- ▲ 8. Meter cluster assembly
- ▲ 9. Instrument panel lower center cover assembly
- ▲10. Control lever assembly
- ▲11. Instrument panel assembly
- 12. Meter assembly
- 13. Radio assembly

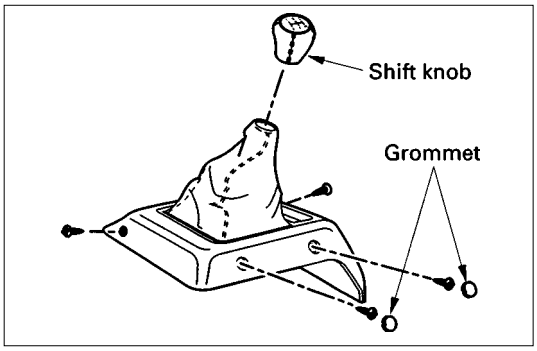

Important Operations

1. **Center Console Assembly**
   - Remove shift knob and 2 fixing screws (front side).
     Open the grommet and remove 2 fixing screws (rear side).

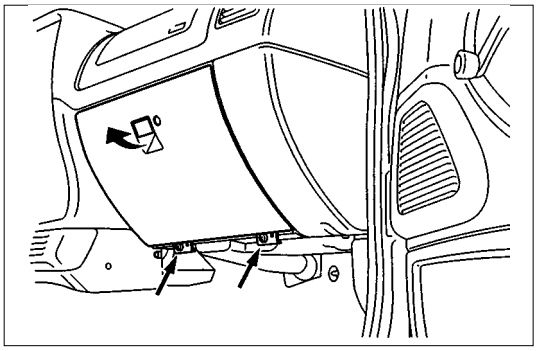

2. **ECM cover**
3. **Glove Box**
   - Remove 2 fixing screws and pulling the handle.
4. **Glove Box Cover**
   - Remove 4 fixing screws and pull the cover toward you and remove the clips at 2 positions.
5. **Instrument Panel Passenger Lower Cover Assembly**
   - Remove 3 fixing screws and 1 clip.

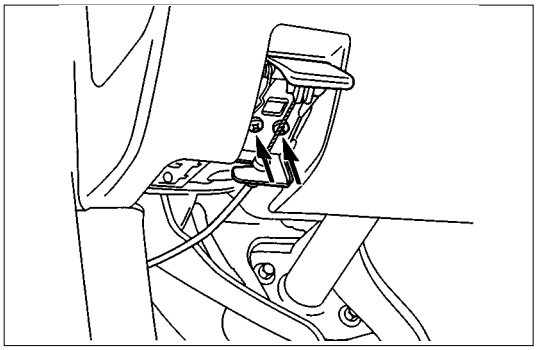

6. **Instrument Panel Driver Lower Cover Assembly**
   - Remove the engine hood opener 2 fixing screws and 6 fixing screws.

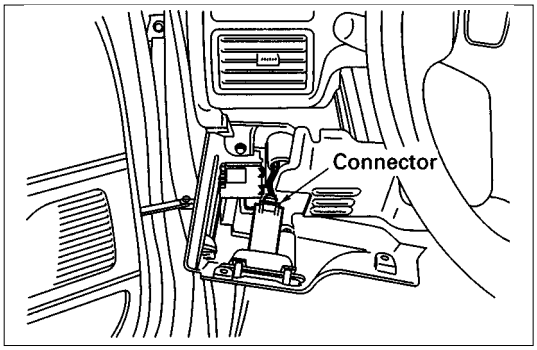

- Disconnect the connector of the illumination.

7. **Lower Cluster Assembly**
   - Remove 3 fixing clips.
8. **Meter Cluster Assembly**
   - Remove 3 fixing screws, 7 clips and switch connectors.

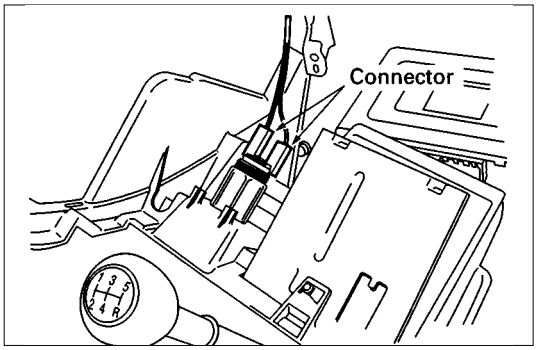

9. **Instrument Panel Lower Center Cover Assembly**
   - Remove 7 fixing screws and disconnect the connector of the cigarette lighter.

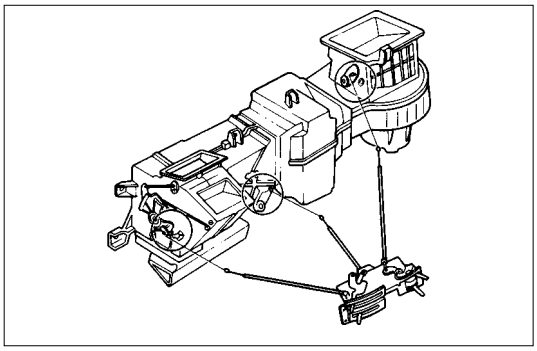

10.Control Lever Assembly

1) Disconnect the control cable from heater unit and blower unit.
2) Remove the control lever assembly fixing screws.

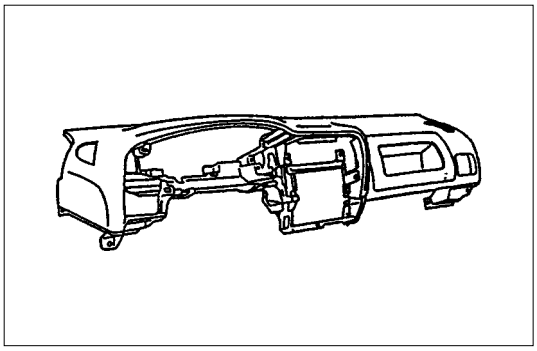

11.Instrument Panel

1) Remove the instrument panel fixing nuts and bolts.
2) Disconnect the instrument harness on ECM.
3) Remove the instrument panel.

INSTALLATION

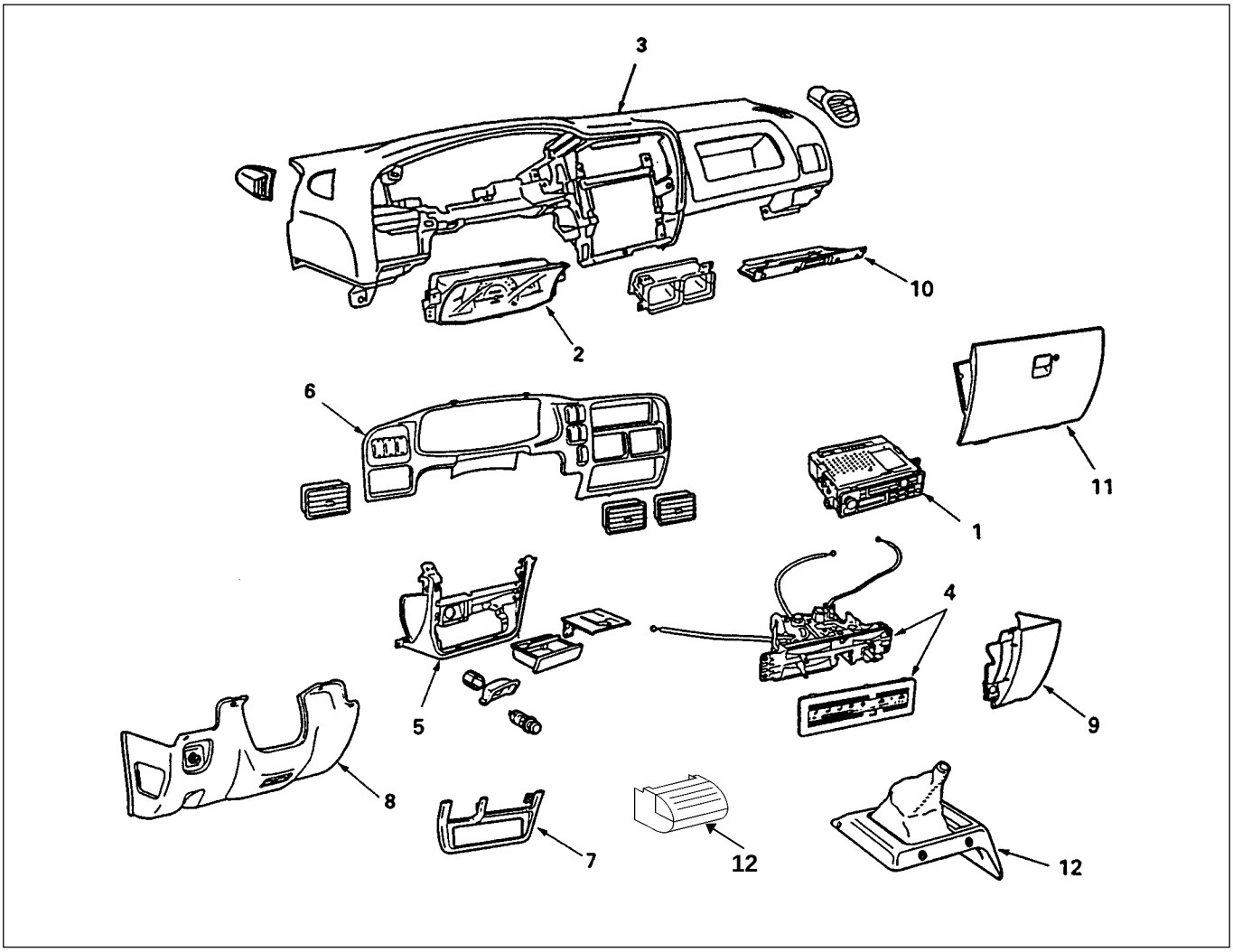

Installation Steps

1. Radio assembly
2. Meter assembly
3. Instrument panel assembly
4. ▲ Control lever assembly
5. Instrument panel lower center cover assembly
6. Meter cluster assembly
7. Lower cluster assembly
8. Instrument panel driver lower cover assembly
9. Instrument panel passenger lower cover assembly
10. Glove box cover
11. Glove box
12. ECM cover (M/T Remote only)
13. Center console assembly

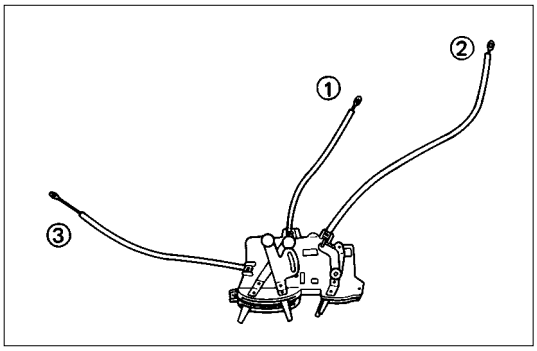

4. Control Lever Assembly

1) Set the temperature control lever and the airsource select lever at the left-hand side end.
2) Set the air selector lever at the right-hand side end.

① : Temperature control cable
②: Air source select cable
③: Air selector

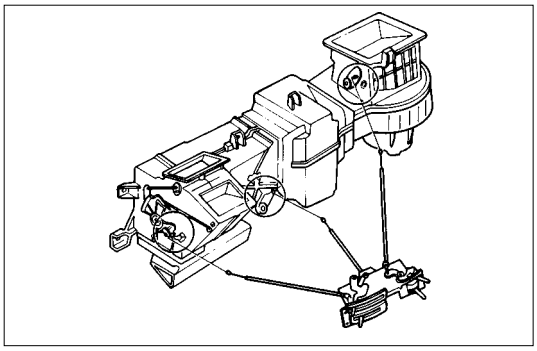

3) Attach the cable, after the work 1) and 2) have been completed.

CONSOLE BOX

REMOVAL AND INSTALLATION

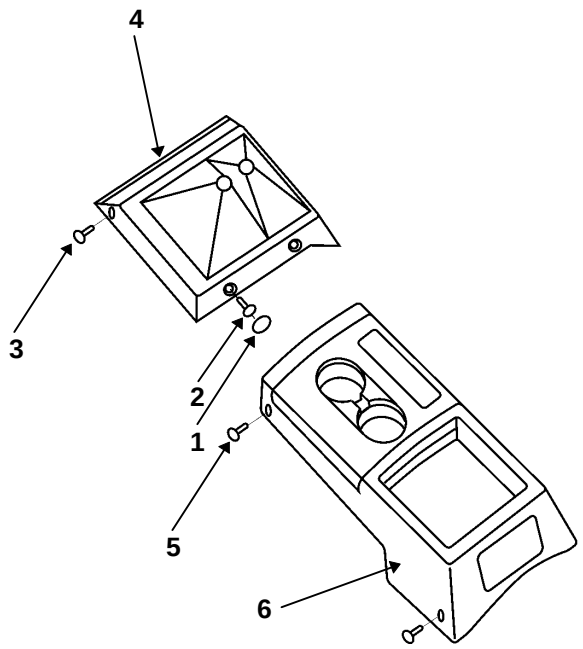

4×4 S Model

Removal Steps

1. Hole cover ×2
2. Screw ×2
3. Screw ×2
4. Center console
5. Screw ×4
6. Rear console

Installation Steps

6. Rear console
5. Screw ×4
4. Center console
3. Screw ×2
2. Screw ×2
1. Hole cover ×2

CONSOLE BOX

REMOVAL AND INSTALLATION

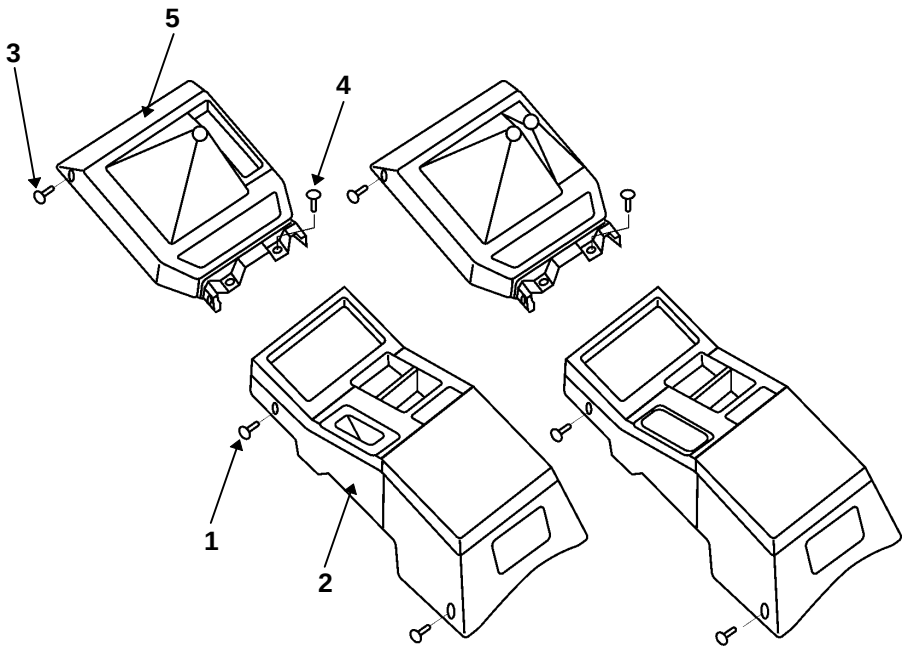

4×2 LS Model

4×4 LS Model

4×2 LS AND 4×4 LS Model

Removal Steps

1. Screw ×4
2. Rear console
3. Screw ×2
4. Screw ×2
5. Center console

Installation Steps

5. Center console
4. Screw ×2
3. Screw ×2
2. Rear console
1. Screw ×4

HEAD LINING

GENERAL DESCRIPTION

STANDARD CAB

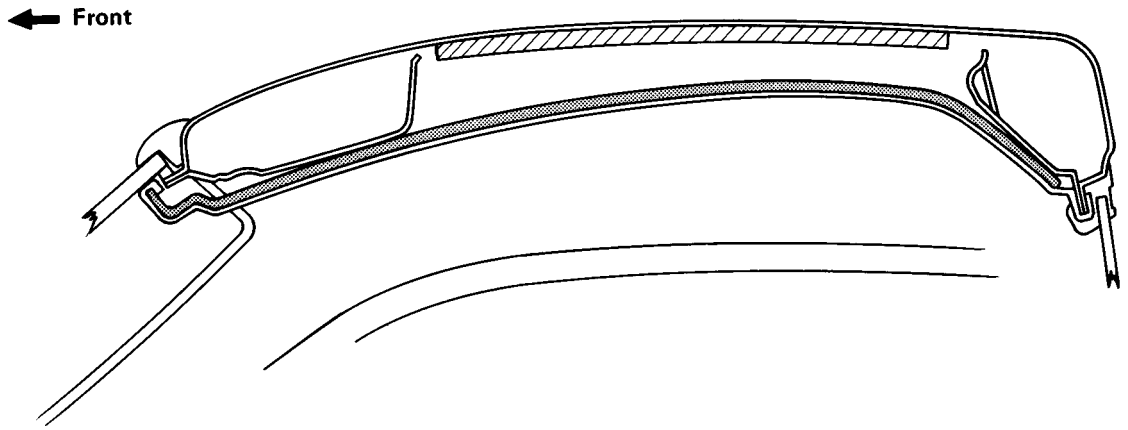

SPACE CAB (SPORTS CAB)

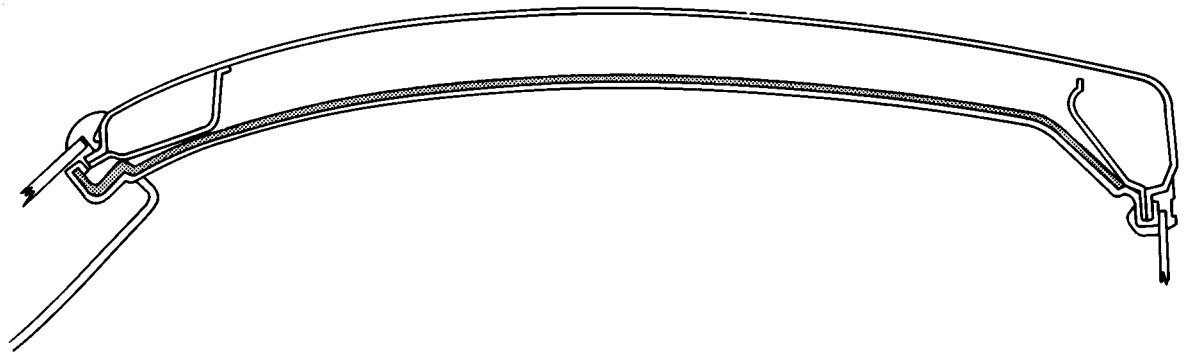

REMOVAL AND INSTALLATION

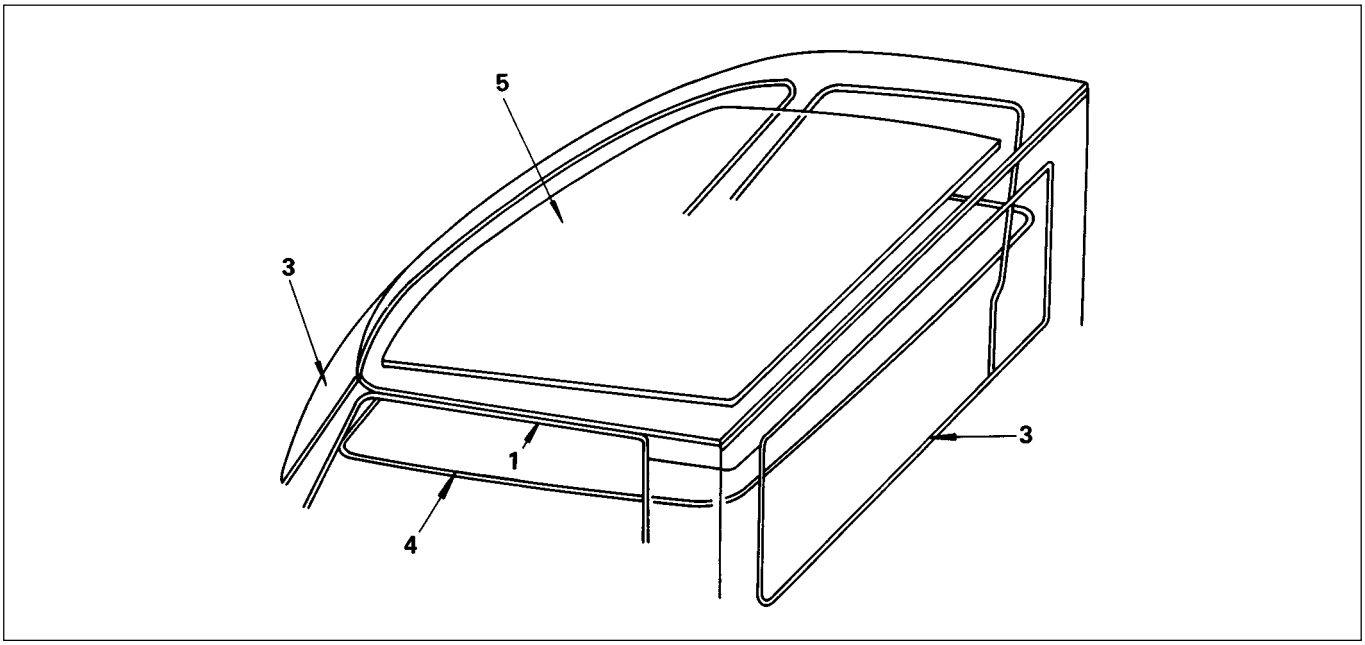

Removal Steps

1. Door finisher
2. Rear view mirror, sunvisor and dome lamp assembly
3. Windshield and back light glass
4. Head lining
5. Insulation pad

Installation Steps

5. Insulation pad
▲ 4. Head lining
3. Windshield and back light glass
2. Rear view mirror, sunvisor and dome lamp assembly
1. Door finisher

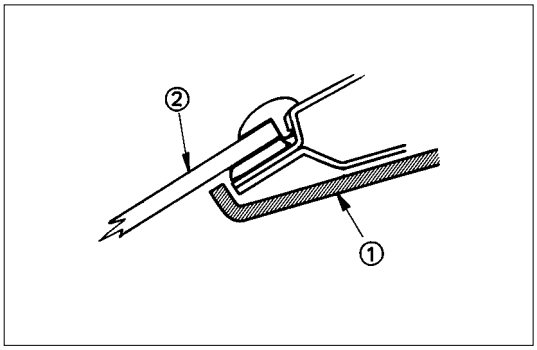

Important Operations - Installation

4. Head Lining

1) Install the head lining ① to the body panel.
   ② : Windshield glass

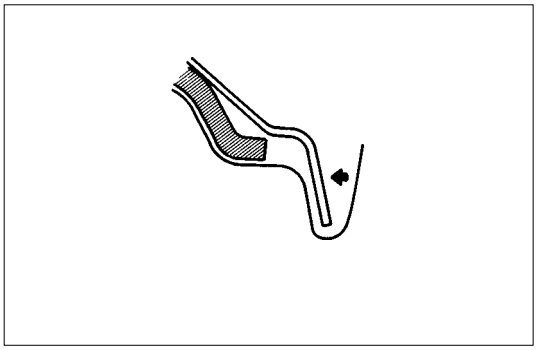

2) Roll up the head lining in the body side of the back light glass and door opening.

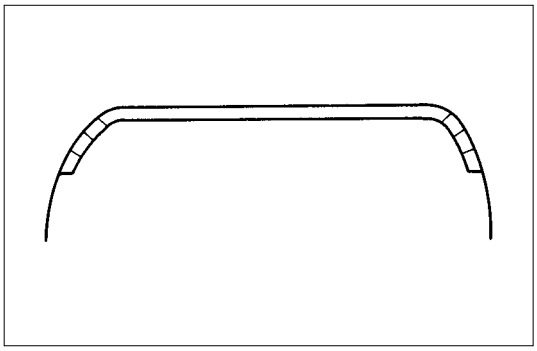

3) Roll up the head lining provided with slits, in the corner.

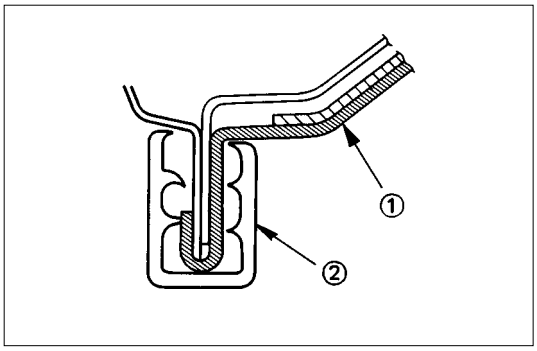

4) Roll up the head lining ① in the body side of door opening.
5) Fix to the door side, using the finisher ②.

QUARTER GLASS (SPACE CAB)

REMOVAL AND INSTALLATION

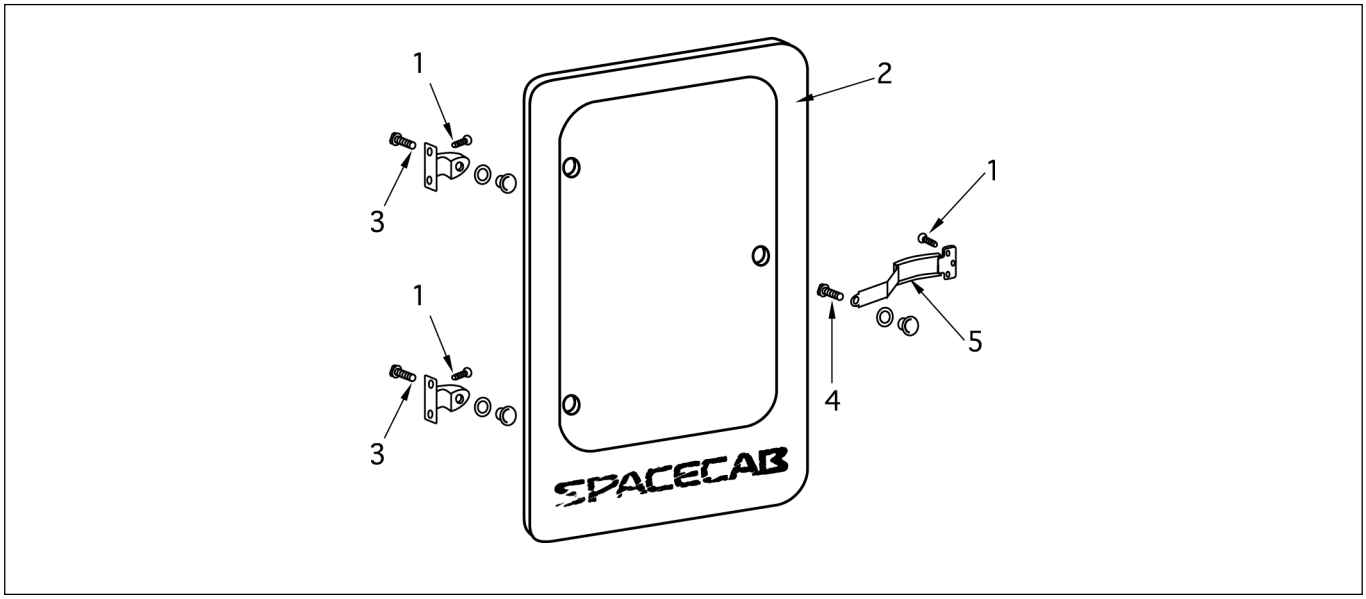

Removal Steps

1. Screw bolt
▲ 2. Quarter glass
3. Screw bolt
4. Screw bolt
5. Fastener assembly

Installation Steps

5. Fastener assembly
4. Screw bolt
3. Screw bolt
2. Quarter glass
1. Screw bolt

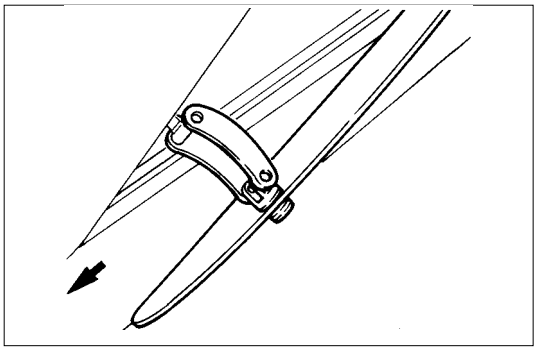

Important Operations - Removal

2. Quarter Glass

Pull out the glass assembly towards the rear of the vehicle.

FRONT SEAT

SPECIAL PARTS FIXING BOLT

N·m (kgf·m/lb·ft)

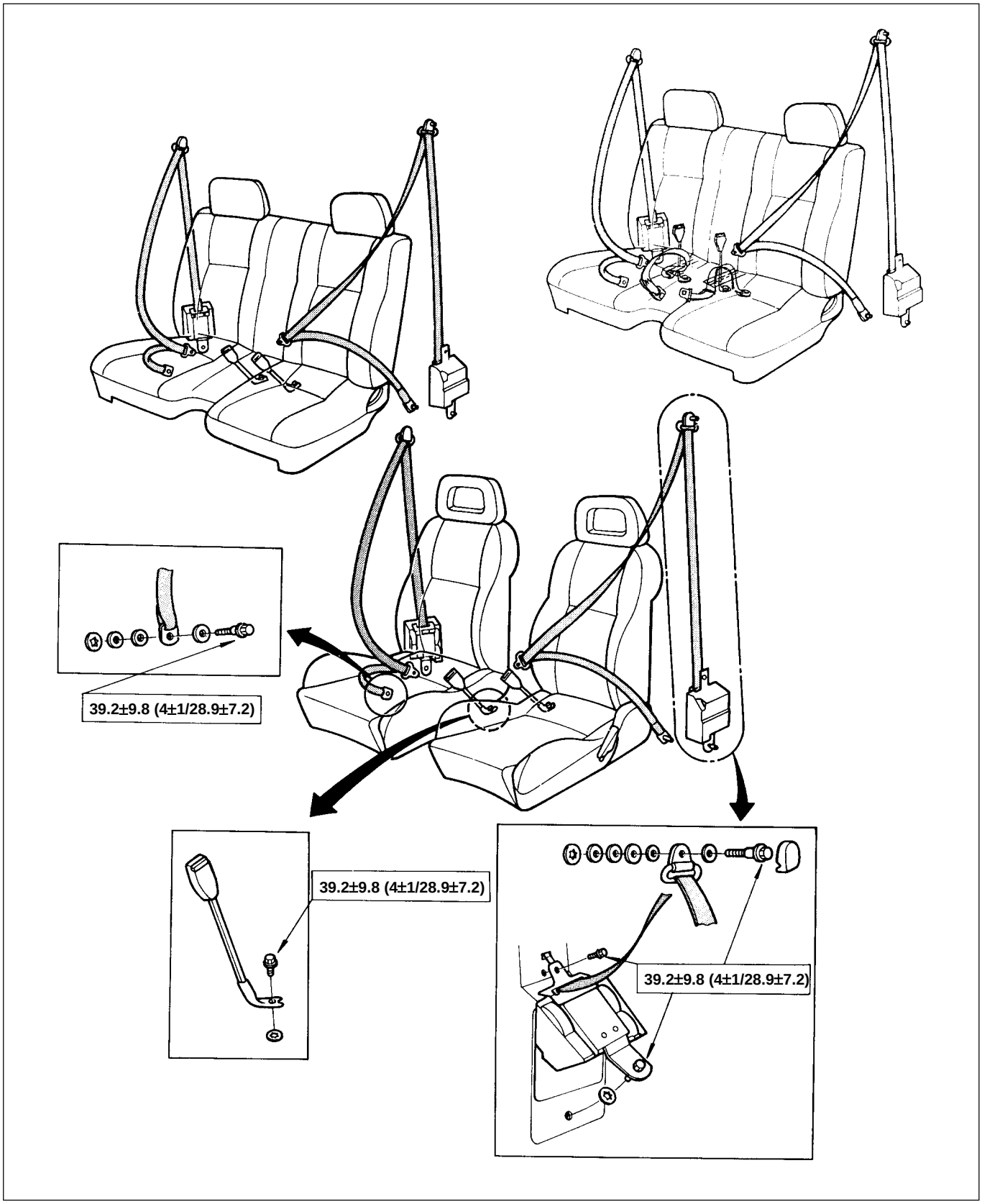

REMOVAL AND INSTALLATION

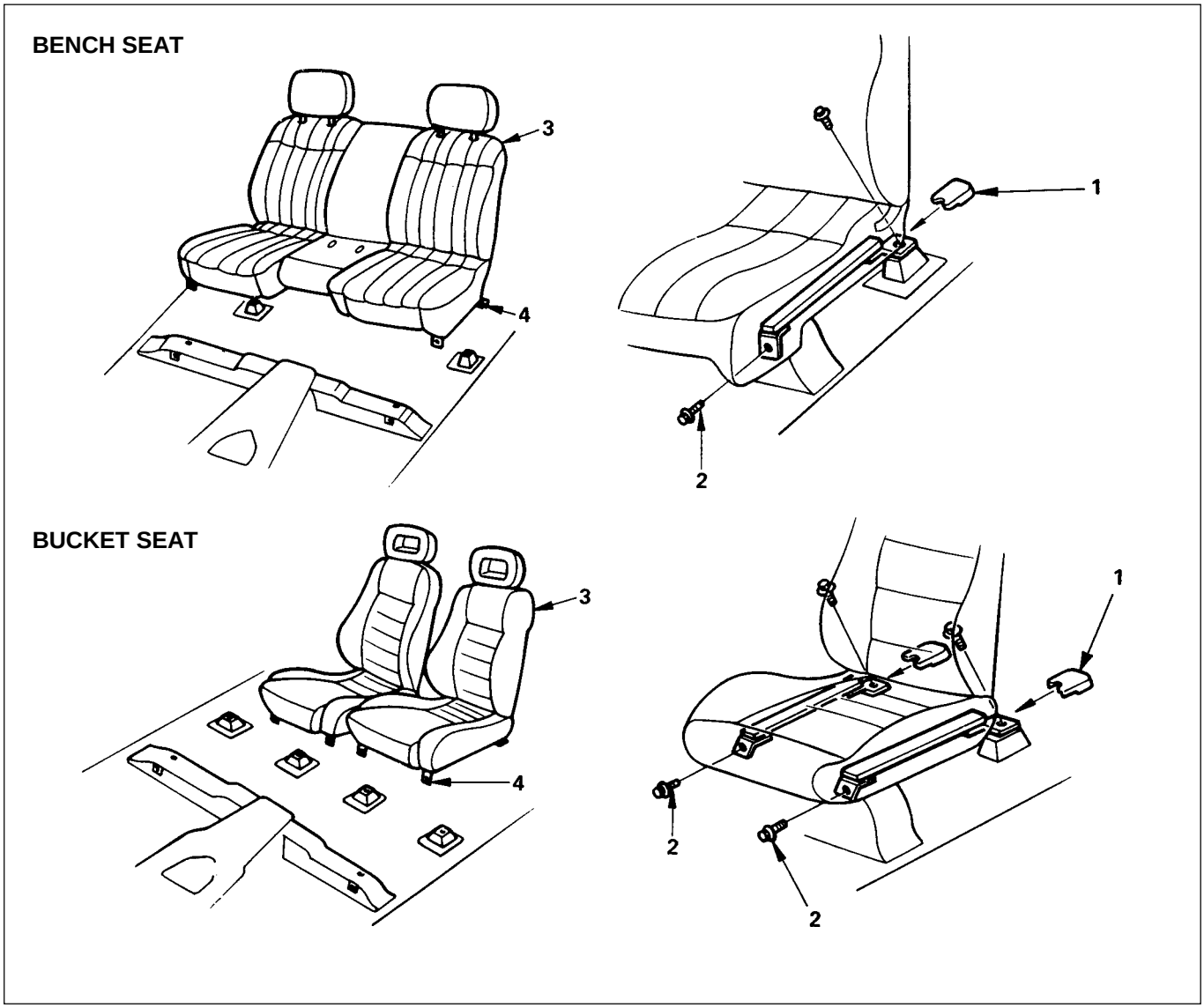

Removal Steps

1. Adjust cover
2. Bolt
3. Seat assembly
4. Adjuster

Installation Steps

4. Adjuster
3. Seat assembly
▲ 2. Bolt
1. Adjust cover

Important Operation - Installation

2. Bolt

Torque	N·m(kgf·m/lb·ft)
39.2 ± 9.8 (4 ± 1 / 28.9 ± 7.2)	

FRONT AND REAR SEAT BELT

REMOVAL AND INSTALLATION

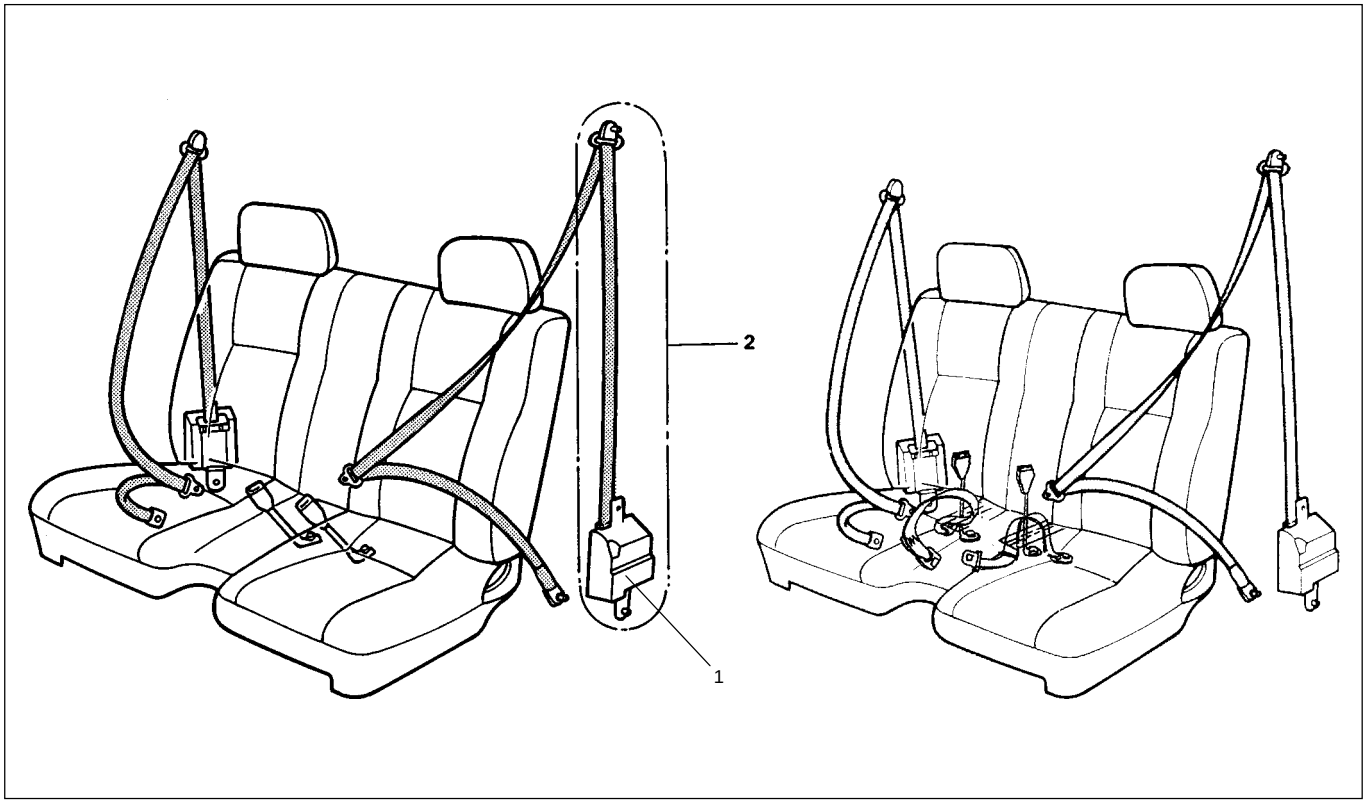

Removal Steps

1. Trim
2. Seat belt and retractor

Installation Steps

▲ 2. Seat belt and retractor
1. Trim

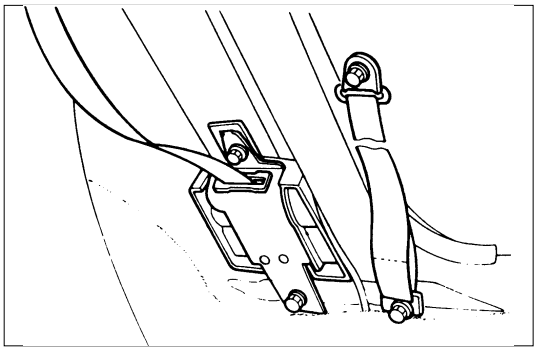

Important Operation - Installation

2. Seat Belt and Retractor

Bolt Torque	N·m(kgf·m/lb·ft)
39.2 ± 9.8 (4 ± 1 / 28.9 ± 7.2)	

JUMP SEAT

REMOVAL AND INSTALLATION

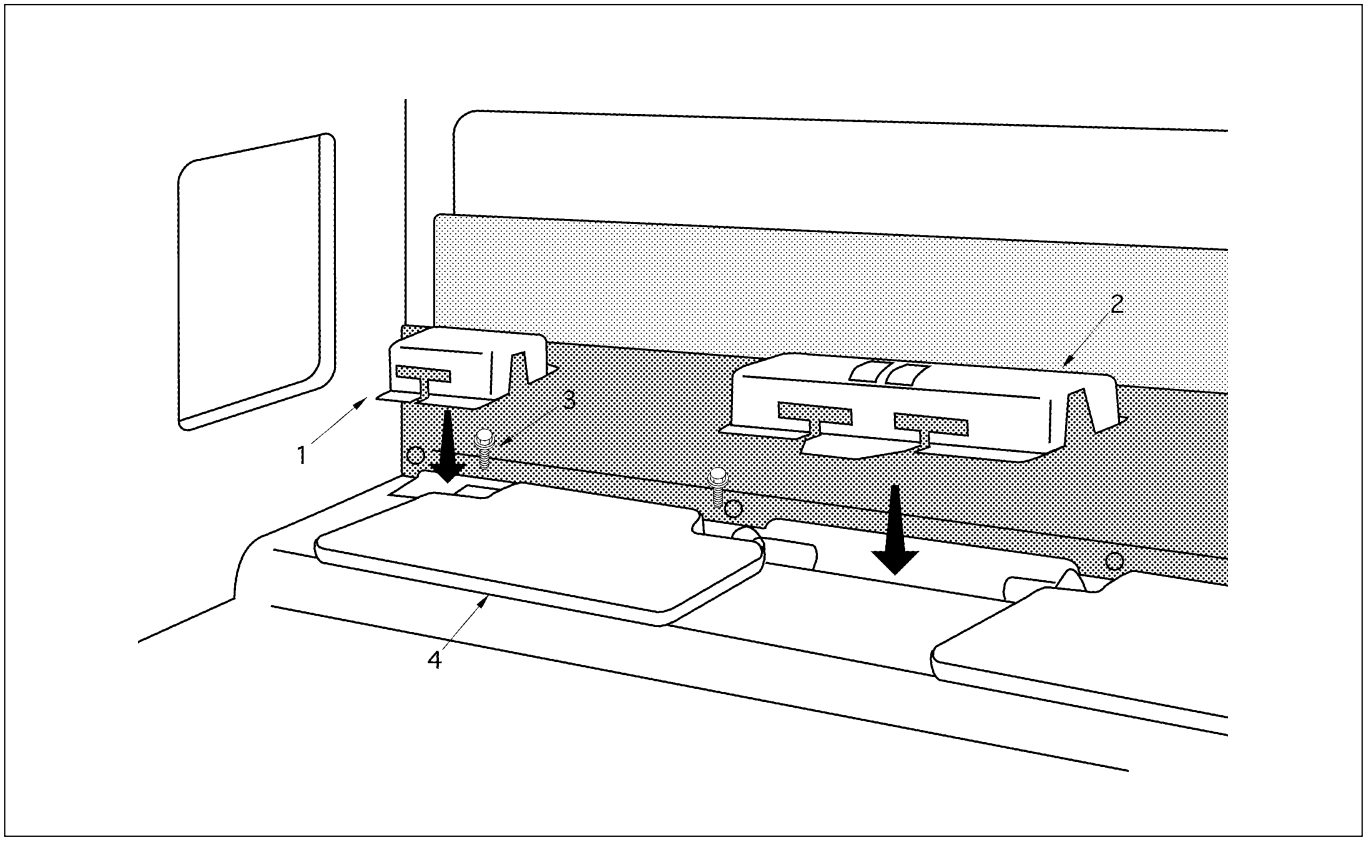

Removal Steps

1. Head rest and back trim cover
2. Hinge cover, center
3. Bolt
4. Jump seat assembly

Installation Steps

4. Jump seat assembly
▲ 3. Bolt
2. Hinge cover ; center
1. Head rest and back trim cover

Important Operation - Installation

3. Bolt

Torque	N·m(kgf·m/lb·ft)
19.6 ± 5 (2 ± 0.5 / 14.5 ± 3.6)	

JUMP SEAT BELT

REMOVAL AND INSTALLATION

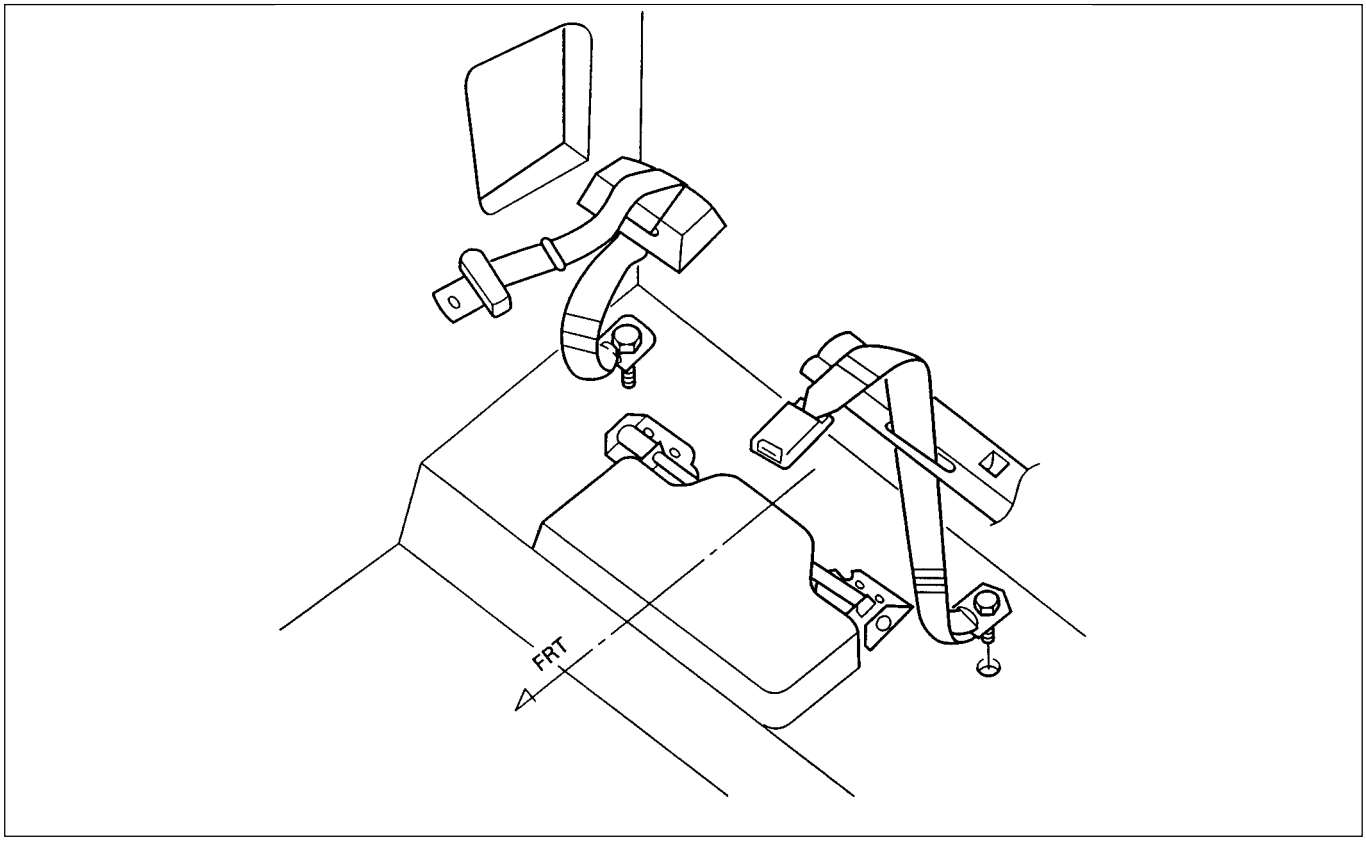

Removal Steps

1. Hinge cover
2. Hinge cover ; center
3. Bolt

Installation Steps

▲ 3. Bolt
2. Hinge cover ; center
1. Hinge cover

Important Operation - Installation

3. Bolt

Torque	N·m(kgf·m/lb·ft)
39.2 ± 9.8 (4 ± 1 / 28.9 ± 7.2)	